ATP 4-44
MCRP 3-40D.14

WATER SUPPORT OPERATIONS

SEPTEMBER 2025
INCORPORATING CHANGE 1 (08 July 2026)

DISTRIBUTION RESTRICTION: Approved for public release; distribution is unlimited.
This publication supersedes ATP 4-44/MCRP 3-40D.14, dated 16 December 2022.

HEADQUARTERS, DEPARTMENT OF THE ARMY
HEADQUARTERS, UNITED STATES MARINE CORPS

Foreword

This publication has been prepared under our direction for use by our respective Service commanders and other commands as appropriate.

ERIN C. MILLER
COLONEL, USA
Quartermaster Commandant

JENNIFER A. NASH
COLONEL, UNITED STATES MARINE CORPS
Commanding Officer,
Marine Corps Engineer School

This publication is available at the Army Publishing Directorate site (https://www.armypubs.army.mil), and the Central Army Registry site (https://rdl.atis.army.mil).

This publication is also available through the Marine Corps Doctrine website (https://usmc.sharepoint-mil.us/sites/MCEN_USMCDoctrine).

ATP 4-44, C1
MCRP 3-40D.14

Change 1
Army Techniques Publication
No. 4-44

Headquarters
Department of the Army
Washington, DC, 08 July 2026

Marine Corps Reference Publication
No. 3-40D.14

Marine Corps Engineer School
Camp Lejeune, NC, 08 July 2026

WATER SUPPORT OPERATIONS

1. This change updates Table E-2, Chlorine Dosage Calculator, with current information.
2. A plus sign (+) marks new material.
3. ATP 4-44, 16 September 2025, is changed as follows:

Change Version Page(s)	Change Description
Page iii	Updates table of contents.
Pages 122	Updates information.

3. An updated Authentication Page has amended the prior authentication reflected in the rear of this publication.

DISTRIBUTION RESTRICTION: Approved for public release; distribution is unlimited.

This page intentionally left blank.

Army Techniques Publication
No. 4-44

Headquarters
Department of the Army
Washington, DC, (16 September 2025)

Marine Corps Reference Publication
No. 3-40D.14

Marine Corps Engineer School
Camp Lejeune, NC, (16 September 2025)

WATER SUPPORT OPERATIONS

Contents

Page

Preface ..... **v**

Introduction ..... **vii**

CHAPTER 1 ..... **1**

OVERVIEW OF WATER SUPPORT OPERATIONS **1**

Introduction to Water Treatment 1

Fundamentals of Water Storage, Maintenance, Transportation, and Supply 3

Water Support in the Army Strategic Contexts 4

CHAPTER 2 ..... **7**

WATER ORGANIZATIONAL STRUCTURE **7**

Strategic Organizations and Responsibilities 7

Army Organizations at Echelons Above Division 8

Sustainment Organizations 10

Division and Below Organizations 16

Marine Corps Water Organizations and Staffs 20

CHAPTER 3 ..... **23**

PLANNING FOR WATER SUPPORT OPERATIONS **23**

The Planning Process 23

Operational Art in Sustainment 24

Planning Considerations by Warfighting Function 26

Water Force Structure Planning 27

Water Planning by Echelon 31

Water Planning Tools 39

Planning Considerations by Foreign or Host Nations 40

Environmental and Climate Planning Considerations 41

DISTRIBUTION RESTRICTION: Approved for public release; distribution is unlimited.

*This publication supersedes ATP 4-44/MCRP 3-40D.14, dated 16 December 2022.

Army Water Planning Process ... 43
Marine Corps Water Support Planning ... 43
Water Reconnaissance ... 45
CHAPTER 4 ... 51
DISTRIBUTION MANAGEMENT AND MATERIEL MANAGEMENT PROCESS ... 51
Materiel Management Functions ... 51
Distribution Management Functions ... 52
Transportation Management Functions ... 53
Distribution Management Process Overview for Water ... 53
Strategic Distribution Management and Materiel Management ... 55
Operational Distribution Management and Materiel Management ... 59
Tactical Distribution Management ... 63
CHAPTER 5 ... 71
SAFETY ... 71
Water Quality Standards ... 71
General and Environmental Safety ... 76
APPENDIX A ... 77
WATER SUPPORT EQUIPMENT ... 77
APPENDIX B ... 95
WATER SITE RECONNAISSANCE AND DEVELOPMENT ... 95
APPENDIX C ... 109
ARCTIC AND EXTREME COLD WEATHER CONSIDERATIONS ... 109
APPENDIX D ... 113
LOGISTICS STATUS, DISTRIBUTION, AND ISSUE REPORTS ... 113
APPENDIX E ... 115
WATER TREATMENT ... 115
Glossary ... 127
References ... 131
Index ... 135

Figures

Figure 2-1. Notional combat sustainment support battalion configuration ... 13
Figure 2-2. Notional battlefield array for combat sustainment support battalions ... 13
Figure 2-3. Notional battlefield array for a water support company ... 15
Figure 2-4. Composite supply company configuration ... 16
Figure 2-5. Division sustainment support battalion ... 17
Figure 2-6. Notational battlefield array for a brigade support battalion ... 18
Figure 2-7. Brigade support battalion distribution company configuration ... 19
Figure 2-8. Forward support company configuration ... 20
Figure 2-9. Notional battlefield array for a forward support company ... 20

Figure 2-10. Marine air-ground task force key elements 21
Figure 3-1. Military decision-making process 24
Figure 3-2. Notional sketch of water site near main supply route 48
Figure 4-1. Theater sustainment command distribution management center staff 56
Figure 4-2. Expeditionary sustainment command distribution management center staff 60
Figure 4-3. Sustainment brigade support operations staff organization 64
Figure A-1. Lightweight water purifier 79
Figure A-2. Tactical water purification system 81
Figure A-3. Reverse osmosis water purification unit 83
Figure A-4. Lightweight water purification system 84
Figure A-5. Marine Corps tactical water purification system 85
Figure A-6. Platoon water purification system 86
Figure A-7. 40,000-gallon water storage and distribution system 87
Figure A-8. 800,000-gallon water storage and distribution system 87
Figure A-9. Tactical water distribution system 88
Figure A-10. Expeditionary water distribution system 89
Figure A-11. Design for operational use of the EWDS 89
Figure A-12. Forward area water point supply system 90
Figure A-13. 2,000-gallon load handling system compatible water tank rack system 91
Figure A-14. Semi-trailer mounted fabric tank 91
Figure A-15. Unit water pod system (Camel II) 92
Figure A-16. Marine Corps water six container storage tank module 92
Figure A-17. 400-gallon water buffalo 93
Figure A-18. Early entry fluid distribution system 94
Figure B-1. Turnout 100
Figure B-2. Turnaround 100
Figure B-3. Stake method 102
Figure B-4. Gravel pit method 102
Figure B-5. Gravel pit method with bucket 102
Figure B-6. Improvised dam 103
Figure B-7. Baffle dam 103
Figure B-8. OISS vertical and horizontal configuration 108
Figure E-1. Water treatment process 115
Figure E-2. Reverse osmosis process 117
Figure E-3. Reverse osmosis membrane composition 118
Figure E-4. Spirally wound reverse osmosis membrane assembly 118
Figure E-5. Breakpoint chlorination chart 125

Tables

Table 3-1. Basic Marine Corps water consumption planning factors 45
Table 3-2. Raw water source reconnaissance considerations 49
Table A-1. LWP consumable requirements 78
Table A-2. TWPS consumable requirements 80
Table A-3. ROWPU consumable requirements 82
Table B-1. Equipment and readiness planning checklist 95
Table B-2. Water support formulas 98
Table C-1. Arctic water treatment operations equipment considerations 110
Table C-2. Cold weather kit for HIPPO located in TM 10-5430-244-10 112
Table C-3. Cold weather kit for Camel II located in TM 10-2330-402-13&P 112
Table E-1. Strength of chlorine solutions 122
+Table E-2. Chlorine dosage calculator 122

This page intentionally left blank.

Preface

ATP 4-44/MCRP 3-40D.14 provides doctrinal guidance and direction for United States Army and United States Marine Corps units conducting water support operations. The techniques provided in this publication are non-prescriptive ways or methods that units can use to perform water support missions, functions, or tasks.

The principal audience for ATP 4-44/MCRP 3-40D.14 is all members of the profession of arms. Commanders and staffs of Army and Marine Corps headquarters serving as joint task force or multinational headquarters should also refer to applicable joint or multinational doctrine concerning the conflict continuum and joint or multinational forces. Trainers and educators throughout the Army and Marine Corps will also use this publication.

Commanders, staffs, and subordinates must ensure that their decisions and actions comply with applicable United States, international, and, in some cases, host-nation laws and regulations. Commanders at all levels will ensure that their Service members operate in accordance with the law of armed conflict and the rules of engagement. (Refer to FM 6-27 for legal compliance.)

This publication implements the following procedures in accordance with international agreements:

STANAG 2136. 19 October 2022

STANAG 2629. 22 March 2024

ATP 4-44/MCRP 3-40D.14 uses joint terms where applicable. Selected joint and Army terms and definitions appear in both the glossary and the text. Terms for which ATP 4-44/MCRP 3-40D.14 is the proponent publication (the authority) are italicized in the text and marked with an asterisk (*) in the glossary. When first defined in the text, terms for which ATP 4-44/MCRP 3-40D.14 is the proponent publication are boldfaced and italicized, and definitions are boldfaced. When first defining other proponent definitions in the text, the term is italicized and the number of the proponent publication follows the definition. Following uses of the term are not italicized. Underlined text identifies Marine Corps specific terms, phrasing, or concepts not included in their own dedicated sections.

ATP 4-44/MCRP 3-40D.14 applies to the Active Army, Army National Guard/Army National Guard of the United States, United States Army Reserve, and the total force Marine Corps unless otherwise stated.

The proponent of ATP 4-44/MCRP 3-40D.14 is the United States Army Quartermaster School. The preparing agency is the G-3 Doctrine Division, United States Army Combined Arms Support Command (USACASCOM). Send comments and recommendations on DA Form 2028 (*Recommended Changes to Publications and Blank Forms*) to Commander, United States Army Combined Arms Support Command, ATTN: ATCL-TDID (ATP 4-44), 2221 Adams Ave, Bldg. 5020, Fort Lee, Virginia 23801-1809; or submit an electronic DA Form 2028 by email to usarmy.lee.tradoc.mbx.leee-cascom-doctrine@army.mil.

The Commanding Officer of the Marine Corps Engineer School is appointed as the author and manager of Marine Corps content in this publication. Marine Corps personnel can submit suggestions and changes by mail to the Commanding Officer (ATTN: S-3), Marine Corps Engineer School, PSC Box 20069, Camp Lejeune, North Carolina 28542-0069 or by email to MCES_S3_DoctrineSMB@usmc.mil.

This page intentionally left blank.

Introduction

ATP 4-44/MCRP 3-40D.14 is the United States Army and United States Marine Corps manual for planning and executing water support for missions conducted across the full conflict continuum. In the United States Army, water support operations are a Quartermaster Corps function as well as a component of Army logistics. Army logistics is an element of the sustainment warfighting function, which provides the operational commander freedom of action, extended operational reach, and operational endurance. Water support operations include water treatment, storage, and distribution. Water treatment is a field service function, while water storage and distribution are supply functions. In the Marine Corps, water support operations are a general engineering function as well as a component of tactical-level logistics. Logistics is a warfighting function in the Marine Corps. Water support operations are critical to the United States Army and United States Marine Corps; they directly impact the depth and duration of military operations. Marine Corps readers should note that the near equivalent for an Army brigade combat team is the regimental combat team.

ATP 4-44/MCRP 3-40D.14 contains numerous revisions. This publication incorporates current terminology from the Army operational concept described in ADP 3-0. Additional current terminology is also included from TB MED 577/NAVMED P-5010-10/AFMAN 48-138_IP, JP 4-03, STANAG 2136 and STANAG 2629.

Information that has been revised from previous publications includes force structure changes, strategic partner changes, and improved planning techniques. Information that has been added to this publication includes distribution management, the materiel management process, and greater discussion of water support in large-scale combat operations as outlined in FM 3-0 and FM 4-0.

ATP 4-44/MCRP 3-40D.14 contains five chapters and five appendices:

Chapter 1 provides an overview of water support operations, to include water treatment, storage, and distribution. The chapter also introduces water support in the Army strategic contexts.

Chapter 2 discusses organizational structure. Strategic partners down to quartermaster companies are explained in detail. Roles, responsibilities, functions, and capabilities are addressed for each echelon. Marine Corps organizational structure is described in the same manner.

Chapter 3 outlines planning considerations across multiple dimensions. It describes how operational art concepts, warfighting functions, and Army operational contexts contribute to the planning process, then outlines specific planning factors by geographic location and echelon.

Chapter 4 describes the distribution integration process. It provides an overview of the materiel management, transportation management, and distribution management functions and how the functions are linked, followed by key organizations and responsibilities by echelon.

Chapter 5 contains basic safety information. The chapter includes a description of the dimensions of water quality, including common contaminants, hazardous materials, and other additives. The chapter closes with general equipment and environmental safety considerations.

Appendix A contains information related to the characteristics and capabilities of water support equipment used by the United States Army and United States Marine Corps.

Appendix B provides information for water treatment specialists to consider when developing or improving a single site or multiple sites.

Appendix C specifies information and guidance on operating in extreme cold weather conditions.

Appendix D provides the framework for logistics status reporting.

Appendix E describes the water treatment process in terms of filtration, reverse, osmosis, disinfection, and chlorination.

This page intentionally left blank.

Chapter 1
Overview of Water Support Operations

Water is a physiological requirement for human survival. It is necessary for many military tasks and operations including hydration, food preparation, medical treatment, hygiene, construction, decontamination, maintenance, and other tasks. Raw water is treated to make it suitable for its intended use. Water support operations are conducted to provide water for military use and include treatment, storage, distribution, and supply.

INTRODUCTION TO WATER TREATMENT

1-1. Water is one of the most important logistics commodities required to sustain military operations. Water is consumed to prolong survival and enhance personnel performance. It is necessary for hydration, food preparation, medical treatment, hygiene, construction, chemical decontamination, maintenance, and many more purposes. Water support operations consist of treatment, storage, distribution, and issue of potable and non-potable water in theaters of operations.

1-2. Water is classified as both a field service and a supply function. Water treatment is a field service function. A field service provides adequate quality of life for Soldiers and Marines in a field environment. Water purification, quality surveillance, storage, and distribution of both potable and non-potable water are supply functions in the Army. In the Marine Corps they are a function of general engineering.

1-3. Raw water found in nature may contain pathogens, chemical contaminants, dirt, salt, or other impurities. These impurities must be removed or reduced to levels acceptable for human consumption. Surface water includes streams, rivers, ponds, lakes, seas, and oceans. Ground water includes springs and wells.

1-4. The water treatment process turns raw water into water suitable for its intended use. Raw water is classified by hardness based on the concentration of total dissolved solids (TDS). The TDS of water is composed of mineral salts and small amounts. Regarding saltiness, for example, fresh water has a TDS concentration of less than 1,500 milligrams per liter (mg/L); brackish water has a TDS concentration between 1,500 mg/L and 30,000 mg/L; and salt water has a TDS concentration of 35,000 mg/L or greater. Army and Marine Corps water treatment units can purify water from all three forms of raw water using water treatment systems. Treatment involves purifying water from a raw source and chemically disinfecting purified water to achieve potability standards. Water treatment systems remove suspended solids, microbiological contaminants, and undesirable chemicals from raw water. Water that has been treated and disinfected to meet potable (drinking water) standards may be considered purified. (See TB MED 577/NAVMED P-5010-10/AFMAN 48-138_IP, for additional information.)

POTABILITY AND PALATABILITY

1-5. Potability and palatability are independent. Water that has been certified potable is treated and disinfected and may have an unpleasant taste or odor but has been determined safe to drink. Palatable water is not necessarily potable and may contain disease or illness-causing substances. The goal of military water systems is to provide adequate quantities of drinking water that is both potable and palatable. Potable water is treated and disinfected water that has been determined to be safe to drink by preventive medicine (PM) personnel. Potability is categorized by short-term potability or long-term potability standards and is considered safe to drink for the period in the appropriate standard. Palatable water is pleasing to the senses. In simplest terms, potable water is safe to consume while palatable water is pleasant to consume (see TB MED 577/NAVMED P-5010-10/AFMAN 48-138_IP for key field water terms and concepts). Potable water is required for the following activities:

- Drinking.
- Ice production for food preservation and cooling.
- Dining facility operation.
- Medical treatment.
- Personal hygiene (brushing teeth, shaving, and showering).

- Potable water hose and pipeline testing and flushing.

Note. The PM medical function naming convention has been changed to operational public health. See FM 4-02 for additional information.

1-6. PM personnel may approve the use of non-potable water for certain activities. If non-potable water is used, it is preferable to use water with the lowest TDS available. Brackish and saltwater are minimally acceptable and may lead to significant corrosion if used for construction or engineering tasks. Non-potable water falls into different classes based on filtration and suitability for the following activities:

- Field Laundry (water must meet quality standards outlined in TB MED 577/NAVMED P 5010-10/AFMAN 48-138_IP).
- Construction.
- Aircraft washing and maintenance (water must meet quality standards outlined in aircraft technical manuals).
- Vehicle maintenance.
- Vehicle and cargo washing.
- Chemical, biological, radiological, and nuclear (CBRN) decontamination of material (water must meet quality standards outlined in TB MED 577/NAVMED P-5010-10/AFMAN 48-138_IP).
- Firefighting.
- Pest control.
- Dust control.

1-7. The Army has Title 10 responsibility for inland storage and distribution of bulk water. AR 700-136 states that potable water must be stored in containers that have been cleaned and sanitized and are clearly labeled "Potable Water Only." TB MED 577/NAVMED P-5010-10/AFMAN 48-138_IP contains procedures and national stock numbers of supplies for sanitizing potable water containers. Coordinate with PM personnel to inspect, evaluate, and test potable water containers that have been used to store anything other than potable water. PM personnel use either DA Form 5457 (*Potable Water Container Inspection*) or the Defense Occupational Environmental Health Readiness System *Water Container Inspection Survey* to keep a record of inspection.

1-8. Potable water stored in a non-potable container is no longer considered potable, but the water may be used for non-potable purposes. Containers that are only used to store or carry non-potable water must be identified and labeled "Non-Potable Water – Do Not Drink." Never use containers that have been used to store petroleum, oils, and lubricants (POL), herbicides, or other toxic materials to store potable water; there is no sanitary procedure to remove such contaminants completely, and they pose a health risk to personnel.

WATER QUALITY STANDARDS

1-9. Water quality standards were developed to protect personnel against performance-degrading effects resulting from the ingestion of water. Standards for water quality were developed for water constituents and impurities that naturally occur or that have been introduced by humans into the water (see TB MED 577/NAVMED P-5010-10/AFMAN 48-138_IP). These standards apply to water produced by military water support units, civilian bottled water companies, water packaged tactically by military units, and host-nation water utilities.

1-10. Short-term potability standards ensure that no dangerous microbiological pathogens are present, especially Escherichia coli. Chemicals or chemical warfare agents are acceptable in concentrations that are safe to consume for short periods. The short-term potability standards are appropriate for periods less than 30 consecutive days. Short-term potability standards acceptable levels for chemical warfare agents are found in TB MED 577/NAVMED P-5010-10/AFMAN 48-138_IP.

1-11. Long-term potability standards apply to periods greater than 30 days and are more stringent than short-term standards. The long-term potability standards are based on the Environmental Protection Agency National Primary Drinking Water Regulations and National Secondary Drinking Water Regulations. Chemical agents and various microorganisms are acceptable in trace amounts, but only for certain periods of time depending on the agents and organisms. See chapter 5 for more information about water quality,

impurities, and the risks to personnel. Long-term potability standards are listed in TB MED 577/NAVMED P-5010-10/ AFMAN 48-138_IP.

1-12. The requirements for commercially produced bottled water purchased by the military are specified in MIL-STD-3006C, which incorporates the United States (U.S.) Food and Drug Administration regulation in 21 CFR 129 and 21 CFR 165. Bottled water potability standards are listed in TB MED 577/NAVMED P-5010-10/AFMAN 48-138_IP.

FUNDAMENTALS OF WATER STORAGE, MAINTENANCE, TRANSPORTATION, AND SUPPLY

1-13. Water is stored and distributed to Army and Marine Corps units based on consumption requirements after it has been treated to achieve potable water standards. Water is supplied to units as a packaged or bulk product. Field-produced drinking water sealed in small containers such as pouches or bottles may be referred to as packaged or bottled field water. Bulk water is water in large quantities. It is important for sustainment organizations and staff to understand the distribution network implications for both products.

BULK WATER

1-14. This publication focuses on bulk water support. Bulk water must be distributed in tanks, bags, drums, hoselines, or pipelines. Bulk water is produced as close as possible to supported units to minimize water distribution requirements. Distribution of bulk water is a main constraint for units that do not have their own transportation assets.

PACKAGED WATER

1-15. The most common form of packaged water is bottled field water, and this publication will refer to all packaged water as bottled field water. Military or contract personnel manufacture bottled field water using military-owned or contractor-owned packaging equipment. The Army has a small quantity of expeditionary water packaging systems to meet initial combatant command requirements and procures additional systems as required. Contractors under United States Army Materiel Command (USAMC) normally maintain and operate these systems. Expeditionary water packaging systems are capable of bottling water but require a source of potable water for bottling. The expeditionary water packaging system must either be connected to a water treatment system or receive bulk water deliveries. Because packaged water is typically sourced from an industrial base through Department of Defense (DOD) contracts, it changes hands many times before reaching the end user. Packaged and bulk water requires an extensive distribution network, which consumes transportation assets and materials handling equipment located at strategic, operational, and tactical levels.

WATER STORAGE AND MAINTENANCE

1-16. Water units store potable bulk water to build required quantities in support of tactical operations. When production of water is greater than the consumption rate, water is stored and stockpiled for when the rate of consumption increases. Stored water is used to meet increased consumption rates when water production is insufficient. Water storage also allows lines of support to stretch further from water sources. Stored bulk water is chlorinated to kill any residual harmful organisms and to assist in the retention of potability standards as it moves through the distribution network. The final stage of water treatment includes injecting chlorine at a minimum of two mg/L (also known as parts per million or ppm) to disinfect. Hypo-chlorination is the application of a hypo-chlorinator to feed calcium or sodium hypochlorite. This solution is used to maintain a disinfectant residual during storage. This process is done to varying standards based on the amount of expected storage time before end-user consumption.

1-17. Water is initially stored in 3,000-gallon collapsible fabric tanks at the water treatment area. In many situations (especially at echelons above brigade), water is transferred to a storage area that is typically located near the water treatment area. Water handled by tactical units is normally stored in collapsible tanks that are organic to the unit. The issuance and direct distribution of potable bulk water to supported units comes from these organic storage systems. The required amount of bulk water storage depends on factors including—

- Consumption rates.
- Stockage objective.
- Water purification capacity.

- Distance from the consumer to the water source.
- Availability of redundant water supply.
- Environment and weather.
- Physical space and security.
- Other mission variables.

1-18. The Army Medical Department recommended field water chlorine residuals from the point of production and initial distribution to the point of use can be found in TB MED 577/NAVMED P-5010-10/AFMAN 48-138_IP. Water treatment specialists will adjust the chlorine level at potable water issue points during bulk storage and distribution operations so that free available chlorine residuals remain at 1.0 mg/L. Maintaining 1.0 mg/L or greater in the central distribution system may require chlorine levels at the production site greater than 1.0 mg/L after a 30-minute contact time.

1-19. Regardless of the treatment methodology, a minimum 0.2 mg/L free available chlorine residual must be maintained in unit-level distribution containers. Water treatment specialists should make every attempt to provide water to the individual Service member with the lowest chlorine residual possible that ensures potability. PM personnel and water treatment specialists will monitor water storage and distribution systems (WSDSs) to ensure chlorine residuals maintain potability standards. Unit field sanitation teams are responsible for monitoring and maintaining the using unit's organic potable water containers.

WATER DISTRIBUTION

1-20. Bulk water distribution requires input and action from the theater to the squad and team levels. The three methods of bulk water distribution include:

- Unit distribution is a method of distributing supplies by which the receiving unit is issued supplies in its own area, with transportation furnished by the issuing agency.
- Supply point distribution is a method of distributing supplies to the receiving unit at a supply point. The receiving unit then moves the supplies to its own area using its own transportation. When executing supply point distribution, receiving units travel to a supply point and are issued water directly into organic WSDSs.
- Throughput distribution is a method of distribution that bypasses one or more intermediate supply echelons in the supply system to avoid multiple handling.

1-21. Water units are designed to provide unit distribution to a brigade or battalion supply point. Marine Corps bulk water distribution is normally unit distribution conducted by a logistics combat element. However, a combination of unit distribution, supply point distribution, and throughput distribution may be required to meet water consumption requirements.

1-22. Army water purification platoons have some organic storage and distribution capacity; however, most units produce more water than can be stored, distributed, or transported with organic equipment. Truck companies use hard-shell tanks such as the load handling system compatible water tank rack (universally referred to as the HIPPO) organic to the storage section of a water platoon to transport and distribute water. See chapter 4 for more information on water distribution.

1-23. Water can be issued from storage and distribution systems directly to an end user or by supply point distribution, unit distribution, or throughput distribution to supported units. Water issued from water supply points at all echelons must be tracked closely to ensure accurate historical data is captured. Historical data ensures that unit logistics planners and water treatment specialists are using accurate data to forecast future demand requirements. DD Form 1715 (*Daily Water Issue Log*) is used to capture historical data.

WATER SUPPORT IN THE ARMY STRATEGIC CONTEXTS

1-24. Sustainment commanders and units must adapt to the changing operational environment (OE) to maintain timely and effective water support. Understanding the changing roles of sustainment based on the strategic context will help ensure that Soldiers and Marines are effectively supported. The three Army strategic contexts are:

- Competition below armed conflict.
- Crisis.
- Armed conflict.

1-25. Water is a critical necessity in every strategic context. Soldiers, Marines, and civilians require a stable source of water; when water is not available, survival is only possible for a matter of days. It is the role of sustainment units to provide enough water to complete objectives in every strategic role.

1-26. Detailed planning is necessary to ensure proper support in each of the Army strategic contexts. Planning considerations include, but are not limited to, supported force structure, water source information (types, volume, and locations), purification and storage capabilities, and source protection. Chapter 3 discusses planning for water support operations in detail.

WATER SUPPORT IN COMPETITION BELOW ARMED CONFLICT

1-27. Operations in competition below armed conflict are intended to deter malign behavior by demonstrating the readiness of Army forces. This includes building partner capabilities and setting conditions for friendly success in the event of a crisis or armed conflict. Tasks include establishing logistics capabilities, fostering relationships with allied or friendly entities, performing security cooperation, and conducting home station activities including training and maintaining operational readiness. These activities help identify, deter, counter, or mitigate threat actions that challenge country or regional stability.

1-28. Water support planning is a critical component of shaping an OE. The analysis and planning include identifying geographical and climate patterns, locating potential water sources, and determining raw water quality. This information provides insight into how many personnel can be supported by bulk water purification, whether the line of communications (LOC) will be easy to interrupt or protect, and how dispersed the water network can be. Based on the results of analysis, planners identify the water support organizations that are required to support the operation and how to position water units. The outcomes of the sustainment preparation affect the operations plans, contingency plans, and time-phased force and deployment data. During this time, procurement and distribution networks are established, and force deployment has begun.

1-29. Although limited, operations designed to shape the OE during competition or crisis may require deploying Army personnel to the theater, including but not limited to planners, special operations forces, security forces, and medical support. Any personnel deployed into the theater will require water support. Water is not only necessary for human survival, but is also used in numerous tasks including hygiene, maintenance, and construction. Sustainment planners must identify and deploy adequate water support units to support shaping activities. Host-nation water (including bottled water) may be used but should not be assumed available or safe to consume. PM personnel will certify all water before consumption. Pre-positioning purification units will allow for organic water production. Shortfalls in the availability of water are addressed by the theater sustainment command (TSC) through contracting bottled water when organic or host-nation support is insufficient.

1-30. Operations during competition below armed conflict are characterized by actions that protect friendly forces and assets as well as deter potential threats from escalating. This includes demonstrating a willingness to fight under the condition that deterrence fails. Competition below armed conflict is generally weighted toward security and preparatory actions to protect friendly forces and to indicate the intent to execute subsequent roles of a planned operation.

1-31. The TSC, expeditionary sustainment commands (ESCs), and sustainment brigades initiate and refine sustainment plans and logistics estimations continuously. Sustainment planners use tools (including the Operational Logistics [OPLOG] Planner and Water Planning Guide) to generate consumption estimates for units at all levels. They also analyze required transportation assets and validate potential sources of water throughout the theater. The Water Planning Guide can be found on the U.S. Army Quartermaster School Petroleum and Water Department website.

1-32. Force consumption and structure estimates are determined and validated during operations to prevent. The TSC refines the theater water support plan and coordinates with the theater Army staff to develop plans and requests for forces. When deployed, the ESC leads water planning and refining of the joint operational area.

1-33. The distribution network must be assessed and refined as a larger number of personnel deploy into the theater. Maneuver units, air and missile defense, civil affairs, engineers, and others are increasingly active during operations to prevent. An increase in the number of personnel in theater will require additional water

for personal consumption. The demand for non-potable water for construction, dust or pest control, and materiel maintenance also increases. Many actions during competition below armed conflict are conducted as part of security cooperation. Water units increase security and quality surveillance measures during these operations.

WATER SUPPORT IN CRISIS

1-34. A *crisis* is an emerging incident or situation involving a possible threat to the United States, its citizens, military forces, or vital interests that develops rapidly and creates a condition of such diplomatic, economic, or military importance that commitment of military forces and resources is contemplated to achieve national and/or strategic objectives (JP 3-0). Once a crisis is defined, a commander's options may include mobilization, tailoring forces, and initial deployment into a theater. Other actions include establishing area denial, anti-access, and air defense capabilities or developing command and control, intelligence, force protection, and logistic capabilities to support the commander's concept of operations.

1-35. Skirmishes or other small-scale conflicts will require water for medical treatment, firefighting, or decontamination. The amount of distribution assets required during the initial stages of conflict directly correlates to the ability to rapidly transition from crisis to large-scale combat.

WATER SUPPORT IN ARMED CONFLICT

1-36. Armed conflict occurs when a state or non-state actor uses lethal force as the primary means to satisfy its interests. Water consumption will be the highest during large-scale combat operations. Stress on sustainment networks is also the highest in this role because of the high tempo and increased consumption of supplies and equipment. This additional stress can cause delays in support. Sustainment planners should also expect peer threats to challenge sustainment forces across all domains. Therefore, having a robust sustainment network that can produce, store, and supply water is crucial to keep pace with the operating tempo (OPTEMPO) and critical to the success of military forces in this role.

1-37. The high OPTEMPO and physical stress of large-scale combat operations create an additional demand for water. Medical treatment, mortuary affairs, CBRN, and maintenance units will be at peak levels of activity during this time. Water distribution during large-scale combat operations will be a key consideration for sustainment planners.

Chapter 2
Water Organizational Structure

Organizations and staffs at the strategic, operational, and tactical levels provide the necessary planning, integration, and synchronization to conduct water support operations. An understanding of the roles and responsibilities at each echelon helps materiel managers and water treatment specialists gain a comprehensive understanding of water supply distribution. Organic unit capabilities discussed in this section increase or decrease based on force design and other operational variables.

STRATEGIC ORGANIZATIONS AND RESPONSIBILITIES

2-1. It is critical that logisticians, senior staff, and commanders understand the role that strategic partners play in water support operations. Each partner, the type of support provided, and coordination points of contact must be understood and leveraged.

2-2. Strategic partners are focused on global supply management. Strategic partners link the economic base (people, resources, and industry) to forces conducting military operations. Strategic partners focus on determining realistic, supportable resource requirements; acquiring, packaging, managing, and positioning supplies; and coordinating with the ESC for movement of materiel into, within, and out of the theater of operations.

UNDER SECRETARY OF DEFENSE FOR ACQUISITION AND SUSTAINMENT

2-3. Department of Defense Directive (DODD) 4705.01E designates the Secretary of the Army as the DOD executive agent for land-based water resources. Therefore, the Army is the lead service for all matters concerning water management in a joint operations area. The Under Secretary of Defense for Acquisition and Sustainment is required to establish DOD policy on all land-based water resource matters. The Under Secretary of Defense for Acquisition and Sustainment tasks the Assistant Secretary of Defense for Sustainment to provide overall guidance and direction for land-based water resource matters through the Joint Water Resources Management Action Group (JWRMAG).

2-4. The JWRMAG is the joint strategic organization for resolving issues related to water. The Secretary of the Army designates the JWRMAG chair; each DOD component has a representative in the JWRMAG. See DODD 4705.01E for more information.

2-5. The functions of the JWRMAG include—

- Determining effects of water resources and related decisions on contingency support functions.
- Developing water support technology research and development and equipment acquisition plans to support operations in all environments.
- Developing and operating an improved, expanded, and automated water resources intelligence database for rapid retrieval of selected data.
- Assessing the water needs of all DOD and non-DOD organizations that affect the availability of water resources to support contingency operational requirements.
- Finding solutions to problems presented to the group.
- Recommending policy changes to the Assistant Secretary of Defense for Sustainment.
- Providing liaison support to host nations, allied or multinational forces, and others to resolve water concerns related to contingency operations.

DEFENSE LOGISTICS AGENCY

2-6. Defense Logistics Agency (DLA) is the DOD strategic logistics provider for all Services, other government agencies, and those allies who have foreign military sales cases. DLA sources and provides almost every consumable item used by Soldiers and Marines. It manages nearly six million separate line items of spare parts for aviation, land and maritime weapon systems, bulk fuel, and critical troop support items involving food, clothing and textiles, medical, industrial hardware, and construction equipment. DLA

supports each combatant commander with a DLA support team that coordinates DLA activities throughout a theater of operations. DLA procures all water treatment chemicals, some water treatment system components, and some water treatment system replacement parts from the commercial businesses that make up DOD's industrial base. DLA procures most of the low-cost and consumable items for water treatment systems. DLA typically does not store items in inventory, but rather uses established contracts to ship from vendor to customer. DLA may establish vendor contracts for packaged or bottled water to mitigate gaps between consumption rates and bulk water supply.

ARMY HEALTH SYSTEM

2-7. The *Army Health System* is a component of the Military Health System that is responsible for operational management of the health service support and force health protection missions for training, pre-deployment, deployment, and post-deployment operations. The Army Health System includes all mission support services performed, provided, or arranged by the Army Medical Department to support health service support and force health protection mission requirements for the Army and as directed for joint, intergovernmental agencies, coalition, and multinational forces (FM 4-02). Theater hospitalization doctrine contains vital information on supporting combat hospitals with bulk water—see ATP 4-02.10 for more details. Force health protection encompasses operational public health (formerly preventive medicine). PM personnel provide water quality surveillance and ensure water quality is within standards set by the Army Medical Department to protect the health of all personnel.

UNITED STATES ARMY MATERIEL COMMAND

2-8. USAMC is the Army's materiel integrator providing national-level technology, acquisition support, materiel development, logistics power projection, and sustainment support. The Integrated Logistics Support Center has item managers that procure water systems, high value replacement parts, and non-expendable components from the commercial businesses that make up DOD's industrial base. The Tank-Automotive and Armaments Command (a subordinate of USAMC) typically stores these high-value items in inventory, unlike DLA. It procures high-cost and non-expendable items such as pumps, bags, and test kits. The item managers field or deploy water systems to Army units and Army stocks based on authorizations and operational requirements.

2-9. The Army Sustainment Command is a subordinate of USAMC and provides command and control of continental U.S. forward-stationed and deployed Army field support brigades. Army Sustainment Command delivers materiel readiness, force generation, and power projection and sets the conditions for future readiness at home station. Army Sustainment Command forward-stationed capabilities provide command and control to all USAMC assets in theater, shape the logistics environment, and help set the theater to accelerate force reception into theater. Army field support brigades conduct forward support of fuel and water systems using USAMC call forward capabilities. Fuel and water support teams from the Sierra Army Depot perform equipment modifications, systemic failure analysis, battle damage assessment and repair, and other tasks. They are placed under operational control (OPCON) of Army field support brigades to conduct sustainment-level maintenance up to the division consolidation areas. These teams can service the 3,000-gallons per hour (GPH) reverse osmosis water purification unit (ROWPU) and the 1,500-GPH tactical water purification system (TWPS).

ARMY ORGANIZATIONS AT ECHELONS ABOVE DIVISION

2-10. Operational headquarters above division typically include the theater Army, field army (if constituted), and Army corps. As the headquarters organizations providing command and control to various subordinate commands within the force, they must be fully aware of water requirements and the status of subordinate organizations. These headquarters must integrate water support into all planning and effectively communicate, coordinate, and cooperate with various sustainment headquarters and support organizations.

2-11. Within the operational headquarters, the G-3 and G-4 staffs, or S-3 and S-4, communicate to subordinate organizations through an operation order (OPORD). The G-3 and S-3 staffs develop the concept of operations specifying mission requirements, tasks, task organization, priorities, and support relationships of subordinates in the OPORD. The G-4 and S-4 staffs are responsible for developing, projecting, and validating consumption requirements from the concept of operations. The G-4 and S-4 provide input to the OPORD, sustainment annex, and assist in the development of the concept of support that includes estimates

for water consumption. The estimates are based on the size of the force, the length of the operation, the climate, and other factors provided by the G-3 and S-3. The G-4 and S-4 also receive, consolidate, monitor, and communicate water support requirements through support channels throughout operations. The function of providing support to water supply operations on the battlefield is the responsibility of the sustainment organizations.

2-12. Sustainment headquarters meet operational requirements through allocation and distribution of resources in accordance with the commander's published priorities of support. It is imperative that operational and sustainment headquarters maintain close coordination and collaboration to ensure a thorough understanding of the OE, support priorities, and water support capabilities. Sustainment headquarters develop an OPORD based on the analysis of the order received from the supported operational headquarters. The sustainment headquarters develops a concept of operations describing how subordinate units execute tasks to support the mission. Chapter 3 expands on the relationship between supported and supporting staffs throughout the planning process.

THEATER ARMY

2-13. The theater Army is the senior Army headquarters in an area of responsibility (AOR). The theater Army is responsible for training, equipping, and sustaining forces, and is responsible for inland storage and bulk water distribution as outlined in the appropriate Service specific subtitle of Title 10, United States Code (USC). The theater Army is responsible for making recommendations to the combatant commander on the use of Army forces within a combatant commander's AOR. The TSC is the Army's command for the integration and synchronization of sustainment in an AOR. The theater Army has staff elements that provide oversight of water supply, storage, reporting, and health safety within the AOR. The G-4 is the primary staff element concerned with water requirements for the AOR in the theater Army. The theater Army G-4 coordinates with the TSC to plan, coordinate, and synchronize sustainment activities in its AOR. The TSC G-3 department or directorate plans and oversees execution of all sustainment tasks required to support the theater sustainment concept of support plan in the AOR for all Army strategic contexts. For additional information on the theater Army, see FM 3-0 or FM 3-94.

FIELD ARMY

2-14. A field army may be constituted if required. When constituted, a field army focuses on the threat to successfully compete, deter, and if necessary, prepare for and transition to combat operations as a land component command. The field army focuses on tactical operations while the theater Army largely conducts administrative and operational activities.

2-15. The Army may constitute a field army in theaters where large-scale combat is possible. If constituted, its primary purpose is to prevent or prevail in large-scale combat against peer or near-peer adversaries. It also enables effective competition against such threats below the threshold of armed conflict. A field army exercises command and control of two or more corps. Mission and operational variables determine the tailoring of field army capabilities and capacity. For additional information on the field army, see FM 4-0 or JP 3-31.

CORPS

2-16. A corps is normally the senior Army headquarters deployed to a joint operations area. The corps is designed to control the operations of two to five divisions. During large-scale combat operations, the corps operates as a tactical formation as well as a headquarters. The corps will normally have OPCON of the subordinate divisions as well as an assigned corps sustainment command and various supporting brigades. The corps sustainment command is the corps' command headquarters for sustainment within its operational area. The corps G-4 staff will coordinate with the corps sustainment command to plan and execute sustainment operations.

2-17. The corps G-3 develops the corps concept of operations. The G-3 concept of operations drives water requirements. The corps G-4 has responsibilities to develop, project, and validate water requirements in support of corps operations as well as receive, consolidate, monitor, and communicate petroleum and water support requirements through support channels during operations. However, the actual function of providing logistical support to facilitate water operations on the battlefield remains with the sustainment organizations.

The corps sustainment command headquarters performs water distribution management and materiel management.

SUSTAINMENT ORGANIZATIONS

2-18. Most water support is conducted through sustainment headquarters and organizations. Higher headquarters define objectives, create long-term plans, and allocate resources. Tactical units operate to complete objectives based on the commander's intent. Understanding the role, capability, and relationship network of each unit is important to properly complete mission objectives.

THEATER SUSTAINMENT COMMAND

2-19. The TSC is the Army's senior sustainment headquarters for the integration and synchronization of sustainment in an AOR. The TSC is assigned to, and receives command and control from, the theater Army in support of the combatant commander. It provides centralized command and control, which enables decentralized sustainment operations throughout an AOR through its attached ESCs, sustainment brigades, and other functional and multifunctional sustainment units. The TSC is a theater-committed asset responsible for connecting strategic enablers to the tactical formations by coordinating with national providers.

2-20. The TSC plans, develops, and directs storage objectives and distribution of water in the AOR to ensure the water support structure is capable of meeting estimated consumption requirements. The fuel and water branch within the TSC distribution management center (DMC) plans and coordinates water support with subordinate headquarters. See Chapter 4 for additional information regarding DMC operations.

2-21. The TSC provides recommendations to the theater Army regarding placement of sustainment units within the AOR to meet water requirements effectively. The TSC monitors the ability of the force structure to meet consumption requirements as operational variables (political, military, economic, social, information, infrastructure, physical environment, and time) change. This allows the TSC sufficient time to plan with strategic partners, the host nation, and contract support to create mitigating strategies.

EXPEDITIONARY SUSTAINMENT COMMAND

2-22. The theater commander determines the task organization of ESCs attached to the TSC. The ESC plans for near-term operations and synchronizes water support within an assigned operational area. The ESC is dependent on the TSC staff for long-range planning. It is important for the ESC planners to maintain close coordination with supported units to anticipate requirements and keep pace with the OPTEMPO. ESCs attached to a TSC coordinate with the TSC and other ESCs in the theater through boards and other synchronization meetings.

2-23. An ESC may be attached to a field army for the integration and synchronization of sustainment in an operational area. The ESC's role is to command and control all attached and assigned task-organized units in the operational area. The fuel and water branch within the ESC DMC plans and coordinates water support with subordinate sustainment brigades and other subordinate headquarters.

2-24. An ESC attached to a field army supports the field army and theater enabling commands. The ESC conducts theater opening, closing, and theater distribution. The ESC provides general support to units in their geographic area. Water support requirements and resourcing can vary greatly depending on the type of supported operation. The ESC is task-organized by the field army headquarters, and it must keep the command informed regarding any sustainment force structure changes required to adequately support the mission.

CORPS SUSTAINMENT COMMAND

2-25. Each corps has an assigned corps sustainment command. The corps sustainment command is the corps' command for the integration and synchronization of sustainment in an operational area. The corps sustainment command provides command and control of all assigned and attached units in an operational area as directed by the corps commander. It plans for near-term operations and is reliant on the corps staff for long-range planning. It provides general support for all units in the corps area of operations (AO). The corps sustainment command coordinates with the corps G-4 to address requirements and shortfalls, and advises the staff regarding capabilities, task organization, and risks to water support operations.

THEATER PETROLEUM CENTER

2-26. The Theater Petroleum Center (TPC) serves as the senior Army petroleum advisor to the geographic and functional combatant commands. The TPC provides strategic and operational planning support to geographic or functional combatant commands, the theater Army, corps, and TSC. The TPC conducts liaison support with Defense Logistics Agency Energy, the United States Army Petroleum Center, the joint petroleum office (JPO), theater Army, corps, TSC or ESC, petroleum groups, sub-area petroleum office, and other partners as needed. The TPC allocates one advisor per theater Army supporting a combatant commander or one advisor per TSC when their capabilities to plan and execute petroleum operations are exceeded. The TPC is normally assigned or attached to a theater Army, corps, or TSC. The TPC may also be attached to a combatant command when supporting the JPO mission as the Army's Service component representative.

2-27. The TPC has a worldwide mission focus and responsibility. Based on requirements and resources available, the TPC supports all theaters of operations simultaneously and refines its focus as conditions require. In this capacity, the TPC interfaces with DOD strategic partners throughout the world in accordance with operational needs.

2-28. The TPC does the following for bulk potable water:

- Assists combatant commands, theater Armies, corps, and TSCs with development of bulk petroleum and potable water policies, procedures, and guidelines.
- Assists combatant commands, theater Armies, corps, and TSCs with development and validation of the petroleum and bulk water support information in operation plans.
- Synchronizes operations and concept of operations plans by providing bulk potable water planning support at the TSC level or above as required.
- Assists in determining transportation (intertheater or intratheater) requirements and methodology for multimodal distribution network movement of liquid logistics and/or alternative fuels from the point of receipt of product from Defense Logistics Agency Energy forward.
- Validates time-phased force and deployment data for liquid logistics units and command and control elements at the theater level and below.
- Supports a JPO as the Army's Service component representative when required.
- Communicates and synchronizes bulk potable water and petroleum/alternative fuel requirements and resources and plans between operational and strategic levels.
- Provides theater-level expertise, augmentation, management, and recommendation to the JPO and G-4 during planning and support of defense support of civil authorities.

QUARTERMASTER PETROLEUM, OILS, LUBRICANTS, AND WATER GROUP

2-29. The quartermaster (POL and water) group is normally assigned to the TSC or an ESC. The group provides planning, liaison, and supervision of the supply and distribution of petroleum and water for a theater of operations. It is structured to bridge the gap between the strategic and operational levels for liquid logistics. This unit provides centralized management of bulk petroleum and water by receiving, consolidating, and tracking accountability reports for water and providing liaison to ESCs, the TSC, or other echelons above brigade as required.

2-30. A critical planning requirement for the quartermaster (POL and water) group is to create detailed plans for the purification, distribution, and storage of potable water. In an early entry mission set, the group is responsible for providing command and control of the theater petroleum and water units assigned to build theater stocks, distribution systems, and quality surveillance support. The quartermaster (POL and water) group conducts operational planning for the development, rehabilitation, and extension of host-nation systems, transportation, and storage facilities.

2-31. The quartermaster (POL and water) group is dependent on external support for area signal support, security, construction, facility maintenance, and other supporting functions. Engineer support is required for construction, rehabilitation, and maintenance of petroleum and water facilities.

2-32. Sustainment brigades may be attached to a TSC or ESC. The sustainment brigade's role is to provide command and control over all assigned or attached task-organized units operating from theater level to

division level in an AO. The sustainment brigade provides planning, synchronization, and oversight of water operations to supported units.

2-33. The sustainment brigade can command three to six combat sustainment support battalions (CSSBs). The attached CSSBs may have water support companies or composite supply companies (CSCs) attached during task organization. Water support companies and CSCs purify water and have limited storage and distribution capacity in relation to the amount of potable water they produce. The sustainment brigade may have additional units (such as a medium truck company) attached which can augment the limited storage and distribution capacity. The fuel and water section within the sustainment brigade support operations (SPO) staff conducts the materiel and distribution management of water within the sustainment brigade's AO.

COMBAT SUSTAINMENT SUPPORT BATTALION

2-34. The CSSB is attached to a sustainment brigade. The CSSB is task-organized by the sustainment brigade according to the supported operation. The CSSB provides command and control for one organic headquarters company and up to six assigned or attached functional and multifunctional companies.

2-35. Many of the companies attached to the CSSB are tailored to fit a specific operation. For example, a CSSB providing support to many units in a large geographic area would be task-organized with separate functional logistics companies or modular platoons to accommodate the large demand. When deployed together, a quartermaster supply company, water support company, petroleum support company, and a field services company provide the same capabilities as a CSC, but at a much larger scale. A CSSB supporting a smaller area or number of units might be task-organized with a CSC. The CSC provides the same capabilities as the individual functional companies, but with much less capacity.

Combat Sustainment Support Battalion

- **Role:** The role of the CSSB is to exercise command and control for task-organized companies, teams, and detachments executing logistics operations.
- **Capability:** The CSSB controls and synchronizes the logistics operations of up to six functional companies.
- **Parent:** Sustainment brigade, ESC.
- **Command relationship:** Normally attached to sustainment brigade; may change based on mission requirements.
- **Support relationship:** General support to all units in its area unless otherwise directed.
- **Span of operations:** Joint security area up to the field trains.
- **Mobility:** Requires 83% mobility in one lift while using organic assets.

2-36. Maneuver brigades are dependent on the units attached to a CSSB to provide purified water, as the brigades do not have organic water treatment systems. A water purification company or a CSC will be attached or placed OPCON to the CSSB to execute water support for division operations. Companies that provide water purification and bulk water need to be positioned near a water source that is within proximity of the supported unit.

2-37. The assets necessary to move bulk water are not organic to transportation units. The truck companies within the CSSB tasked to move water augment their distribution capability with assets from Army prepositioned stocks or other sources. Truck companies are capable of hauling 5,000-gallon semi-trailer mounted fabric tanks (SMFTs) with M872 trailers. They can also move the 2,000-gallon capacity HIPPO by load handling system (LHS) or palletized load system (PLS).

2-38. Figure 2-1 depicts a notional CSSB structure. CSSBs are modular and task-organized by the sustainment brigade, enabling numerous combinations. Figure 2-2 shows the notional location of a CSSB providing water support on the battlefield.

Note. For more information on military symbology, see the most current version of MIL-STD-2525E and FM 1-02.2.

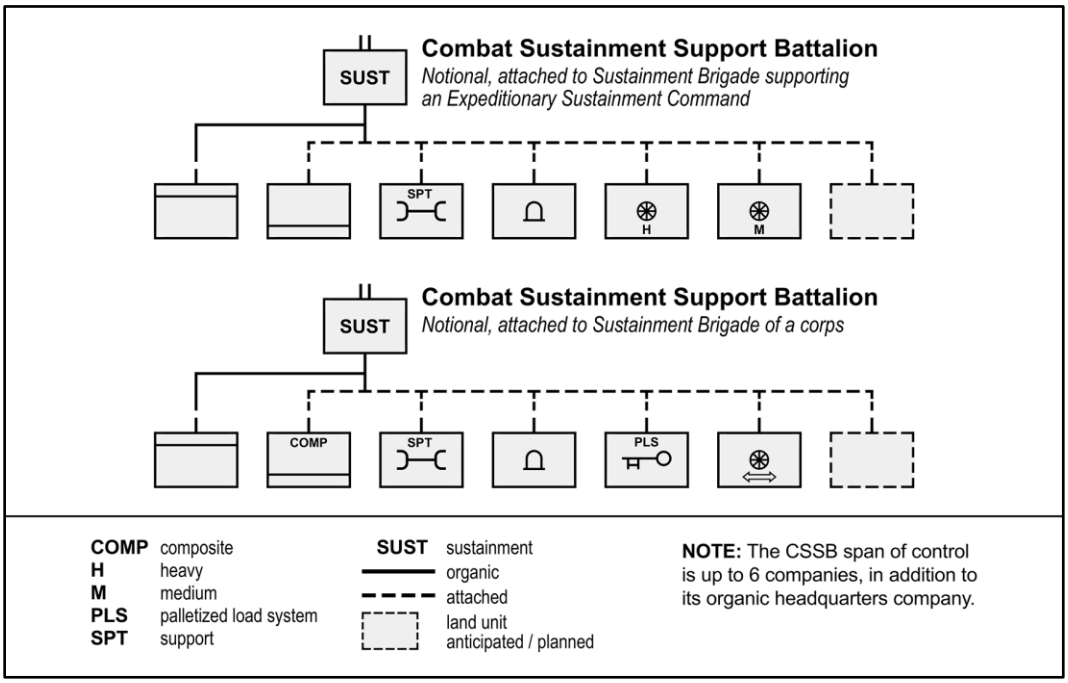

Figure 2-1. Notional combat sustainment support battalion configuration

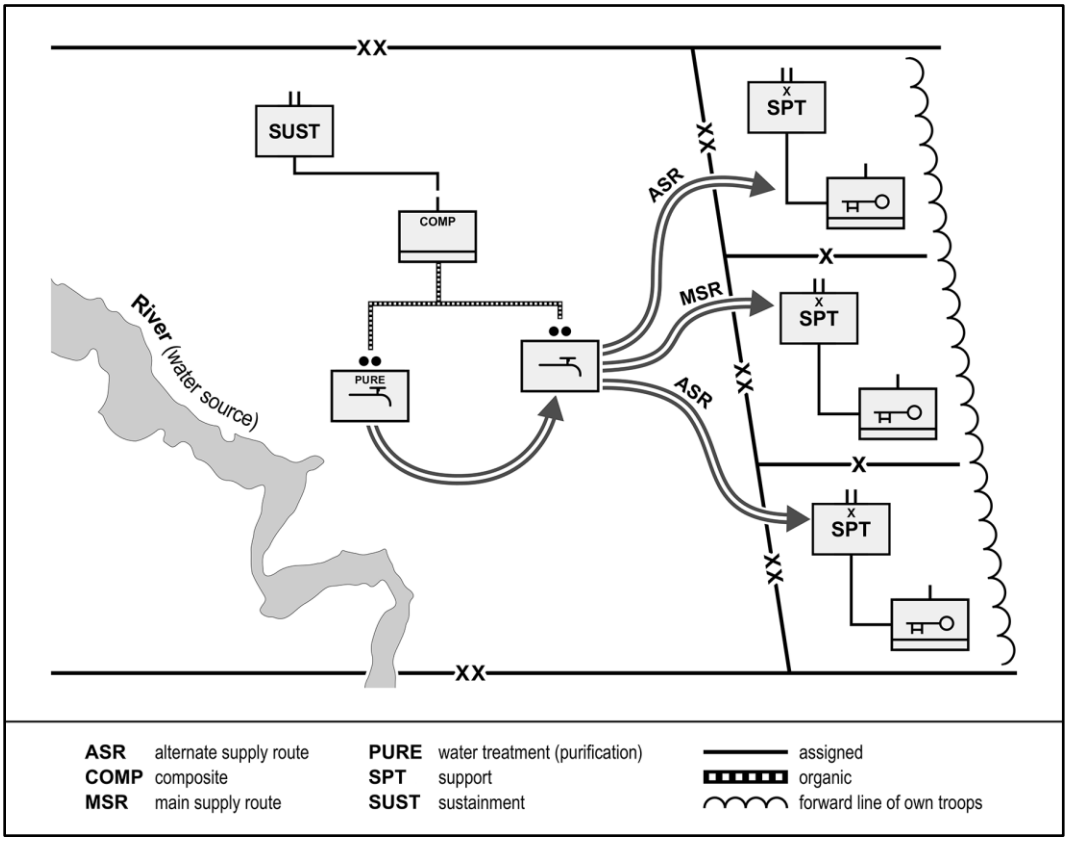

Figure 2-2. Notional battlefield array for combat sustainment support battalions

QUARTERMASTER WATER SUPPORT COMPANY

2-39. The role of a quartermaster water support company is to produce, store, and distribute potable water to supported units within a designated area. The company has three platoons. Each platoon is capable of producing potable water (maximum of 150,000 gallons per day from a fresh water source and 100,000 gallons per day from a brackish or contaminated source) with organic water treatment systems (two ROWPUs and one TWPS per platoon). Each platoon can store a maximum of 40,000 gallons with two 20,000-gallon bags, or 100,000 gallons with two 50,000-gallon bags. The distribution capability for each platoon is 20,000 gallons per day (or 40,000 gallons with two turns). The water distribution sections are the dedicated distribution assets in a division. The water support company will normally be attached to a CSSB or petroleum support battalion and have a general support relationship with supported units. Water support companies are designed to expand capabilities by drawing WSDSs from Army pre-positioned stock. WSDS procurement and configurations are discussed in appendix A.

Quartermaster Water Support Company

- **Role:** The role of the water support company is to produce, store, and distribute potable water to units within a designated area.
- **Capability:** Produces between 300-450k gallons of water daily, stores 120k gallons, and distributes 20k in one turn with organic equipment.
- **Parent:** CSSB or petroleum support battalion.
- **Command Relationship:** Attached.
- **Support Relationship:** Area support.
- **Span of Operations:** Theater support area to the field trains.
- **Mobility:** Requires 100% mobility in one lift using organic assets.

2-40. In addition to the three platoons, a water support company may have command and control of a tactical water distribution system (TWDS) detachment. The TWDS detachment provides additional potable water distribution capability by establishing, maintaining, and operating up to 10 miles of hose line up to the corps rear. The TWDS is designed to move large volumes of water from a water treatment area to a storage or distribution point. Most water support companies belong to the Army National Guard and Army Reserve.

2-41. Figure 2-3 shows the notional location of a water support company attached to a division sustainment support battalion (DSSB) providing general water support in the division area. The DSSB is discussed later in this chapter.

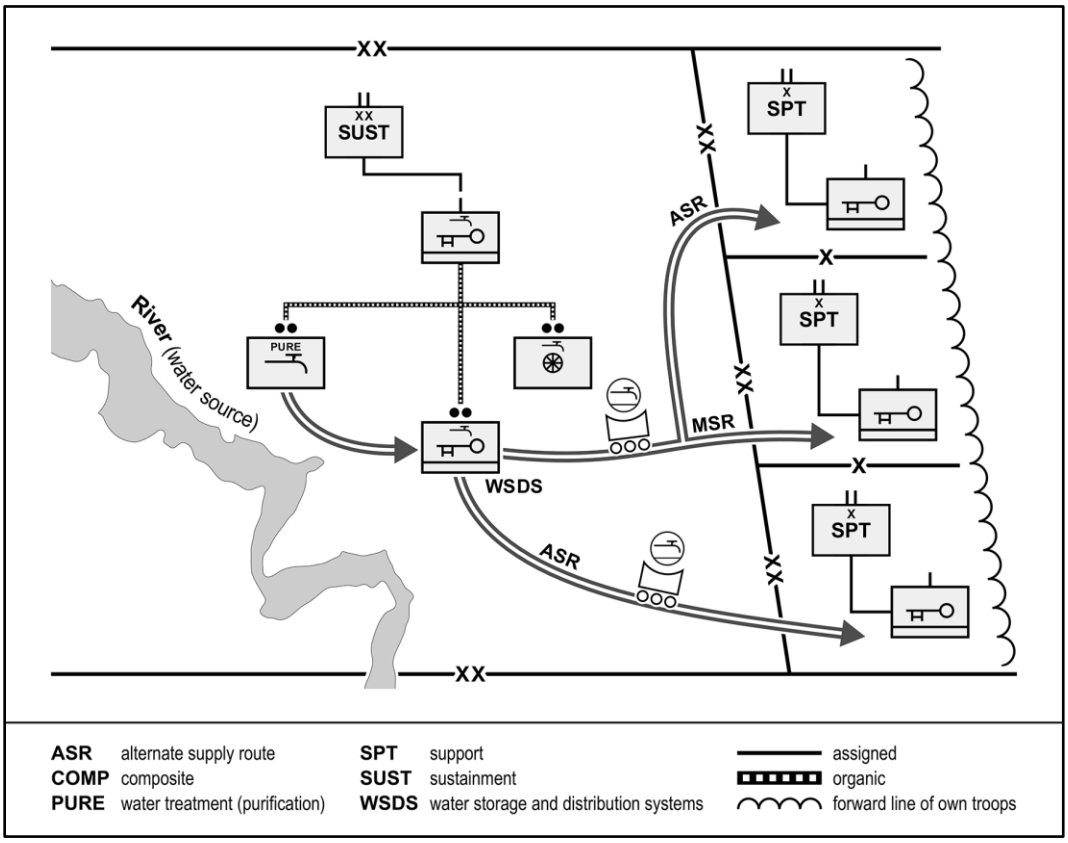

Figure 2-3. Notional battlefield array for a water support company

COMPOSITE SUPPLY COMPANY

2-42. The role of the CSC is to provide supply, petroleum, shower and laundry services, water purification, and water supply support. One version of the CSC will be attached to a CSSB, and another will be organic to a DSSB. The CSC consists of a company headquarters, supply platoon, petroleum platoon, and water platoon. CSCs operate in the division or corps areas depending on their allocation. Elements from the company may operate as far forward as the brigade support area.

Composite Supply Company

- **Role:** Provide general supply, retrograde support, water supply, petroleum supply, and shower and laundry services.
- **Capability:** The CSC can purify, store, and issue 120,000 gallons of potable water.
- **Command Relationship:** Organic to DSSB or attached to CSSB.
- **Support Relationship:** General support to units within the AO.
- **Span of Operations:** Corps or Theater rear boundary to field trains.
- **Mobility:** Requires 50% mobility in one lift using organic assets.

2-43. The company headquarters provides command and control, unit-level administration, unit supply, and CBRN defense support to unit personnel. The operations section coordinates supply, petroleum, water, and shower and laundry field service operations. CSCs are dependent upon the appropriate elements within the theater area for religious, legal, force health protection, and interpreter and translator support. In addition, they require finance, personnel and administrative, field-level communications, electronics maintenance, and supplemental transportation support. CSCs depend upon the composite truck company for the distribution and return of supplies and equipment. They depend upon the support maintenance company for field maintenance.

2-44. The water purification platoon headquarters provides command and control of personnel and equipment to support water production, shower and laundry, storage, and local distribution:

- The water production section can purify up to 120,000 gallons of water per day with four 1,500-gallon TWPS; 30,000 gallons per TWPS from a fresh water source; or 24,000 gallons from a brackish water source. The section is capable of operating four lightweight water purifiers (LWPs), which can produce 2,500 gallons of potable water per day.
- The water storage section can store 80,000 gallons of potable water using its two WSDSs. It may also store an additional 60,000 gallons of water in HIPPOs when not used as distribution platforms. When HIPPOs are loaded on PLS trailers, this section can distribute 8,000 gallons line haul or 16,000 gallons locally, based on two trips per day. The section may direct exchange HIPPOs with supported customer units.
- The shower and laundry section provides CBRN decontamination along with limited shower and laundry capability. This section can support a population of 5,000 personnel per week with showers and clean laundry by using two laundry advanced systems and two twelve-head shower trailers.

2-45. Figure 2-4 depicts the organizational diagram of a CSC.

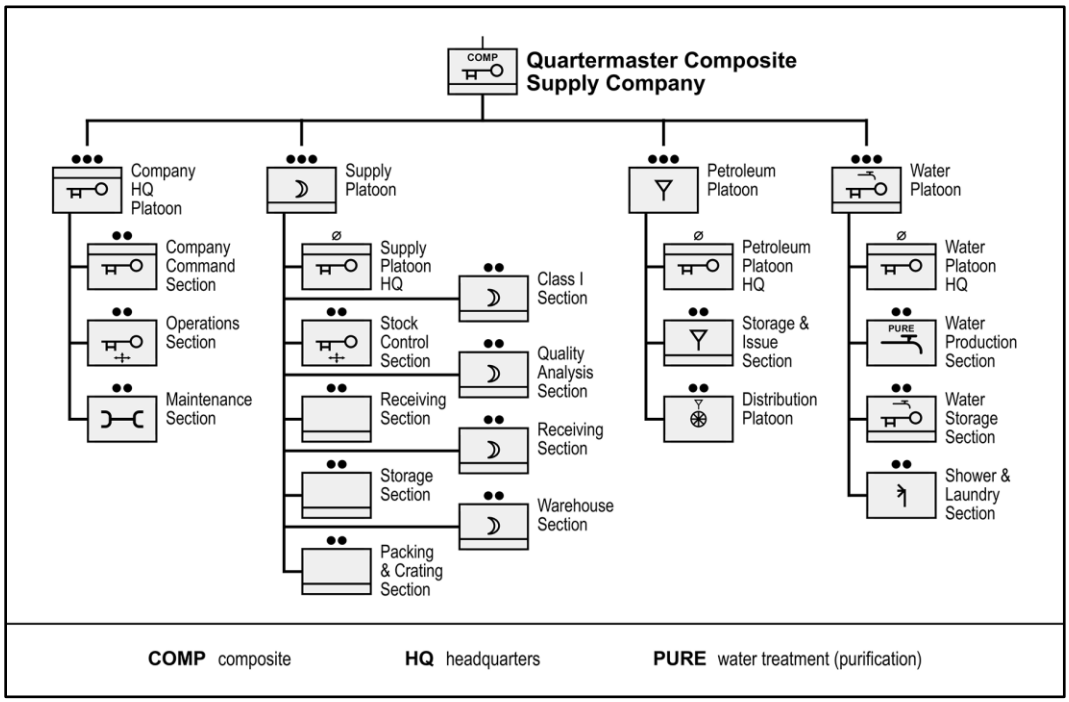

Figure 2-4. Composite supply company configuration

DIVISION AND BELOW ORGANIZATIONS

2-46. Divisions and any attached maneuver brigades are the tactical units of execution for a corps. The division executes sustainment activities through its assigned division sustainment brigade (DSB). The DSB has an assigned DSSB. The maneuver brigade has an organic brigade support battalion (BSB) to provide multifunctional support; however, the BSB currently does not possess an organic water production or storage equipment section.

2-47. The role of the division is to serve as a tactical headquarters commanding brigades. The capabilities of the division are determined based on the direction of the corps and the subordinate units assigned or attached to the division. A division will conduct sustainment operations through its assigned DSB and DSSB, and it may have additional CSSBs attached to the DSB to meet operational requirements. The DSB performs water distribution management and materiel management to directly support the division.

DIVISION SUSTAINMENT BRIGADE

2-48. The DSB is assigned to a division. The DSB commander is responsible for the integration, synchronization, and execution of sustainment operations at all echelons. The DSB employs sustainment capabilities to create desired effects in support of the division commander's objectives. The DSB commander does not replace the division G-4's role as the division sustainment planner responsible for developing the sustainment concept of support based on the division G-3's concept of operations. Water distribution management responsibilities of the SPO staff are the same as at the sustainment brigade, except that it supports units within the division sustainment area.

Division Sustainment Support Battalion

- **Role:** The role of the DSSB is to command and control tactical units executing logistics operations.
- **Capability:** The DSSB controls and synchronizes the logistics operations of four organic companies and up to two additional companies as task-organized by the division.
- **Command relationship:** Organic to the division sustainment brigade.
- **Support relationship:** General support to all units in the division AO.
- **Span of operations:** Division rear boundary to brigade support area.

DIVISION SUSTAINMENT SUPPORT BATTALION

2-49. The DSSB shown in figure 2-5 is organic to DSBs supporting divisions. It has a CSC, composite truck company, and support maintenance company. Other capabilities are task-organized by the division commander in accordance with requirements. The DSSB synchronizes and executes logistics support to maneuver brigades and multifunctional support brigades attached to the division.

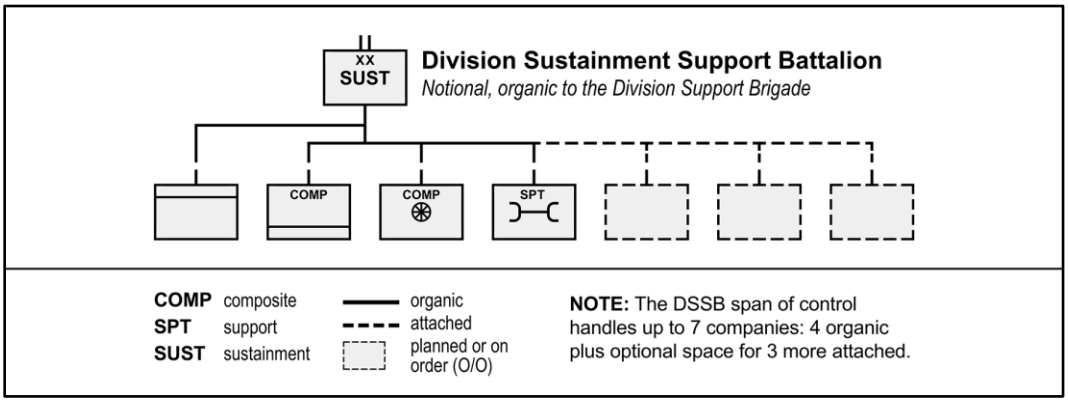

Figure 2-5. Division sustainment support battalion

MANEUVER BRIGADE

2-50. The maneuver brigade is a tactical maneuver unit. The brigade S-4 staff is responsible for tracking the status of logistics operations for the brigade and is responsible for the management of water support to the brigade and subordinate units. The maneuver brigade has an organic BSB that provides multifunctional logistics support to the brigade. The BSB distribution company can receive bulk water and distribute it throughout the brigade. The majority of the BSB's bulk water is distributed to the forward support company (FSC).

BRIGADE SUPPORT BATTALION

2-51. The BSB's role is to support the maneuver brigade's execution of operations by providing sustainment support. The BSB is organic to the brigade and receives its logistics requirements and priorities from the supported brigade S-4. The BSB commander must understand the supported commander's plan and execute it so that the brigade maintains freedom of action and maneuver. The BSB commander exercises command and control over all organic BSB capabilities in support of brigade priorities.

2-52. The BSB SPO officer is the principal staff officer responsible for synchronizing BSB water distribution operations for all units assigned or attached to the brigade. The BSB SPO is the key interface between supported units and the sustainment brigade, applying BSB capabilities against the brigade's requirements.

The brigade S-4 identifies requirements through daily logistic status reports, running estimates, and mission analysis.

BSB DISTRIBUTION COMPANY

2-53. The fuel and water platoon within the distribution company provides water storage and distribution support to the maneuver brigade. The water section within the fuel and water platoon does not have organic water treatment capability. The water section is currently reliant on the CSC to provide water treatment capabilities, which may be pushed forward based on the concept of support. The distribution company water section has the capability to store and distribute 23,000 gallons of water using a forward area water point supply system (FAWPSS) and HIPPOs. Aviation support battalions have an organic water treatment capability to support combat aviation brigade internal potable water requirements.

2-54. Figure 2-6 depicts a BSB distribution company providing water to several forward support companies. Figure 2-7 shows an organizational diagram of a BSB distribution company.

BSB Distribution Company

- **Role:** The BSB distribution company plans, directs, and supervises supply distribution in support to a maneuver or multifunctional brigade.
- **Capability:** The distribution company manages the distribution of supplies to the brigade and provides distribution capability for class I, II, III, IV, V, and IX.
- **Parent:** Brigade support battalion.
- **Command relationship:** Organic to a brigade support battalion.
- **Support relationship:** Direct support to the BSB and maneuver brigade.
- **Span of operations:** Brigade area of operations.

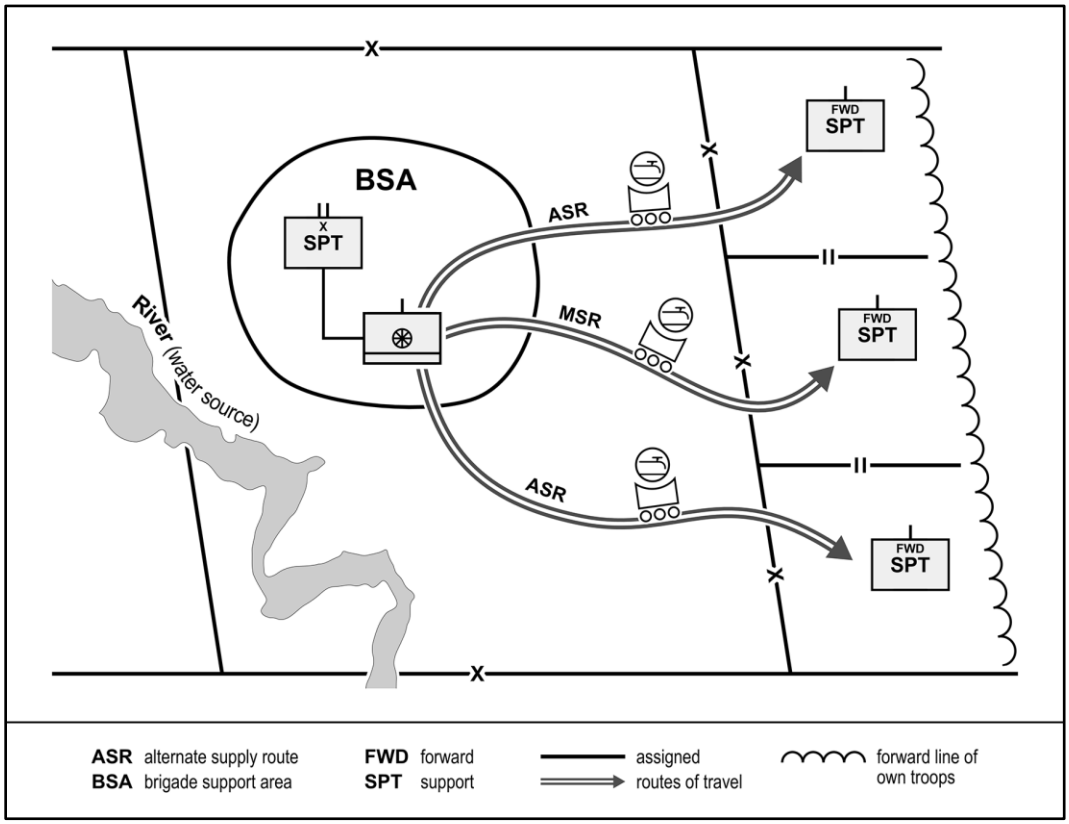

Figure 2-6. Notational battlefield array for a brigade support battalion

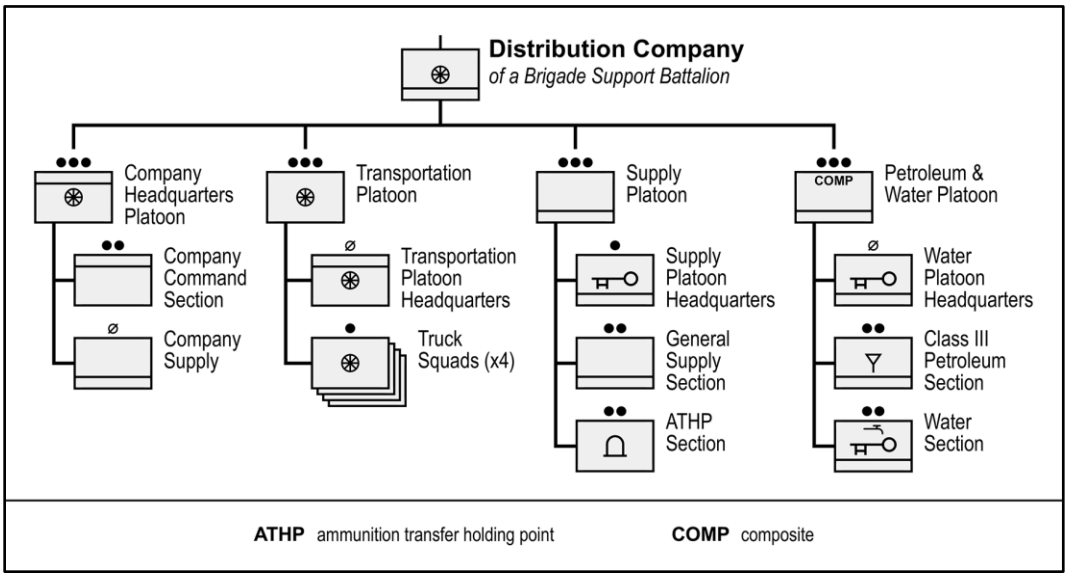

Figure 2-7. Brigade support battalion distribution company configuration

FORWARD SUPPORT COMPANY

2-55. The FSC is designed to extend the reach of the BSB into the maneuver area. FSCs provide direct support to maneuver, engineer, cavalry, and artillery battalions. The FSC's deployment and distribution capacity is based on the type of battalion it supports. FSCs do not have the organic capability to treat bulk water, or store and distribute water to maneuver units. The FSCs allow the greatest degree of flexibility to the BSB commander to prioritize logistics efforts.

2-56. The role of the FSC is to provide direct support to a specific supported battalion. The FSC may be attached or placed OPCON to the supported battalion for a limited duration. The FSC provides logistics support that is organized specifically to meet the supported commander's needs. The FSC commander receives technical logistics oversight and mentoring from the BSB commander. The BSB communicates the concept of support through the SPO to the FSC commander.

Forward Support Company

- **Role:** The forward support company provides logistics in direct support to a specific supported battalion.
- **Capability:** The forward support company provides field feeding, bulk fuel, general supply, ammunition, and field-level maintenance in direct support of a supported battalion.
- **Parent:** Brigade support battalion.
- **Command Relationship:** Organic to a BSB; may be attached or OPCON to its supported battalion for a limited duration.
- **Support Relationship:** Direct support to its specific maneuver battalion, general support to other units in the brigade, general support to others on a limited basis by exception.
- **Span of Control:** Brigade area of operations from the BSA to the forward line of troops.

2-57. The FSC has a headquarters section, a distribution platoon, and a maintenance platoon. Water equipment organic to FSCs includes the M149 400-gallon water trailer (commonly known as the water buffalo) and the 800-gallon unit water pod system (commonly known as the Camel II) which support the FSC field feeding mission and internal FSC water consumption. The BSB may provide HIPPOs to the FSC battalion supply point; in this case, maneuver companies would receive water pushed to them via unit distribution.

2-58. Figure 2-8 on page 20 shows an organizational diagram of an FSC. Figure 2-9 on page 20 shows the notional location of a FSC distributing water to a supported maneuver battalion on the battlefield.

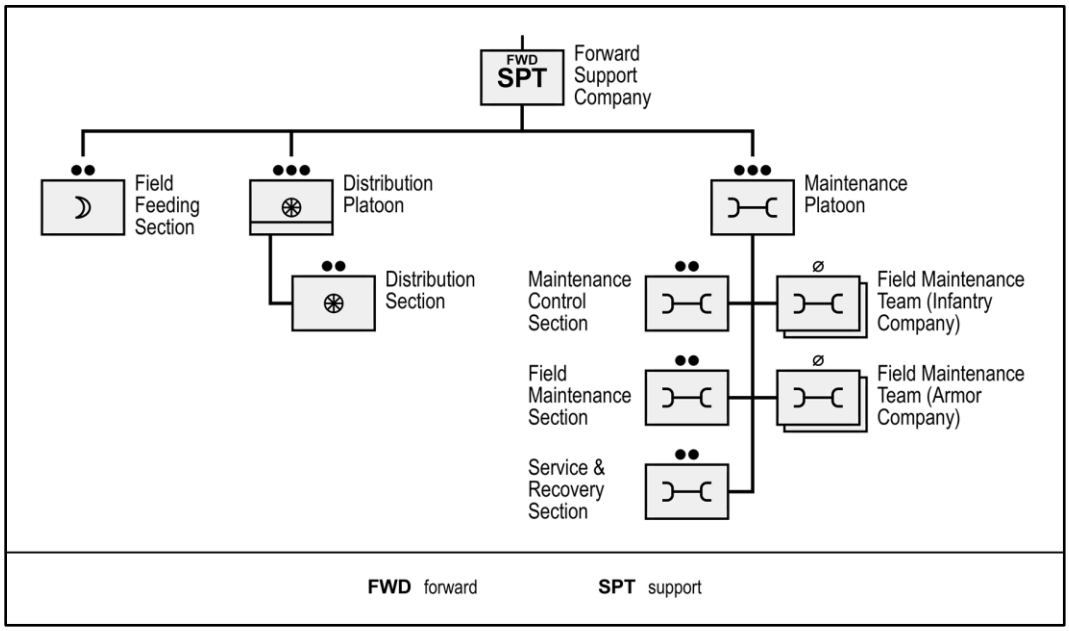

Figure 2-8. Forward support company configuration

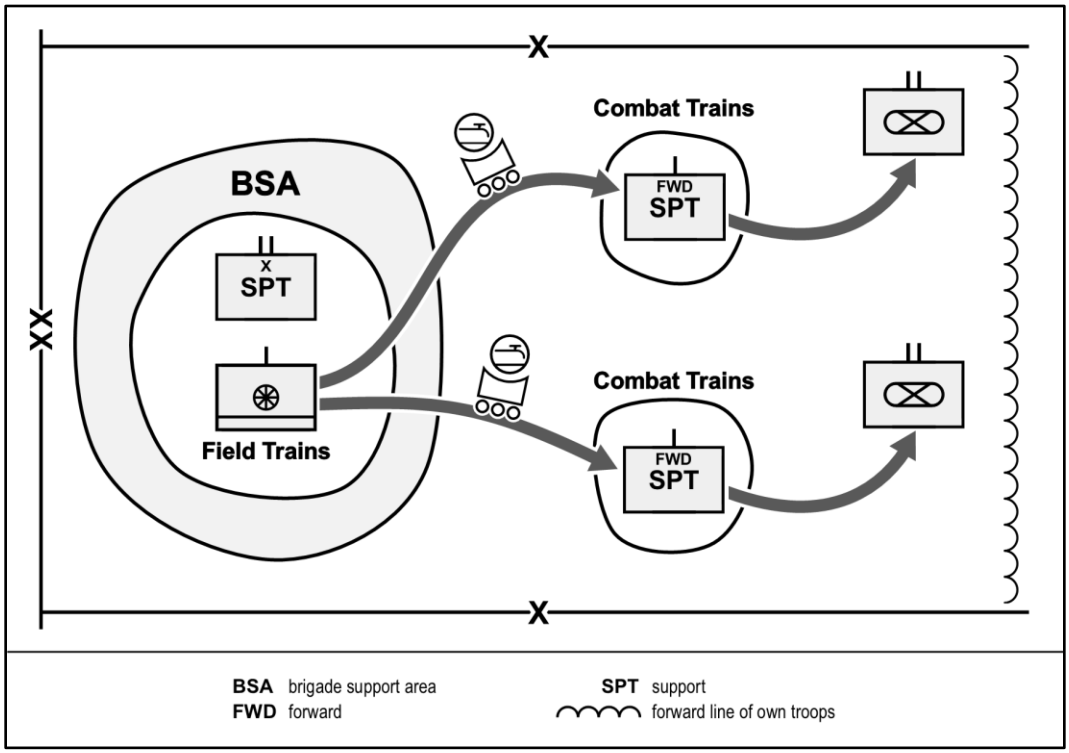

Figure 2-9. Notional battlefield array for a forward support company

MARINE CORPS WATER ORGANIZATIONS AND STAFFS

2-59. The Marine Corps has several different tactical organizations that can provide water support and hygiene services to meet the requirements of Marine air-ground task forces (MAGTFs) conducting missions across the competition continuum. A MAGTF is organized into a Marine expeditionary force (MEF), Marine expeditionary brigade, or Marine expeditionary unit (MEU) depending on the scope of the mission and size

of the deployed force. MAGTFs include four elements: command element, ground combat element, aviation combat element, and logistics combat element. Figure 2-10 depicts the size and purpose of each MAGTF.

2-60. Organizations capable of providing water support within each MEF-sized MAGTF include the engineer support battalion (ESB), the various combat logistics battalions (CLBs) of the Marine logistics group (MLG), and the Marine wing support squadron (MWSS) in the Marine aircraft wing. The MLG CLB is typically designated to provide direct support to a regimental landing team (RLT) or a Marine littoral regiment, while the MWSS provides water support to a Marine aircraft group. The ESB is employed to provide general support across a MEF or Marine expeditionary brigade-sized MAGTF. The MEU-sized MAGTF possesses a single water section within the engineer platoon of the MEU CLB.

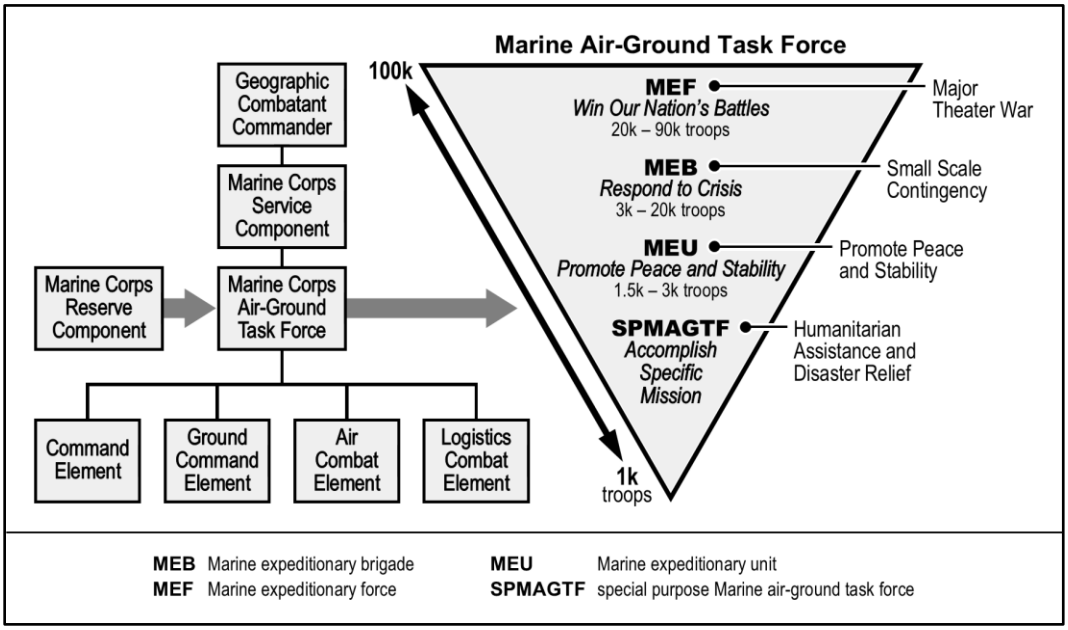

Figure 2-10. Marine air-ground task force key elements

COMBAT LOGISTICS BATTALION

2-61. An RLT is the Marine Corps analog of the Army maneuver brigade and typically consists of three infantry battalions that are reinforced with detachments provided by the combat support battalions of the Marine division (combat engineer, light armored reconnaissance, artillery, assault amphibian, and reconnaissance). An RLT receives direct logistics support from a designated CLB of the MLG. A habitual supporting-unit to supported-unit relationship exists between the RLT and the CLB, both in garrison and while deployed. Core competencies of a CLB include executing water support operations (purifying, storing, and distributing potable water) and providing hygiene services to support ground maneuver units. The CLB is an agile unit with a limited capability and capacity to provide water support and hygiene services. The CLB possesses a small quantity of organic water purification systems to purify fresh, brackish, or salt water. The CLB uses small collapsible storage tanks, water six container (SIXCON) systems, hoses, and connection sets to store bulk potable water. The water SIXCON system is described in appendix A. The CLB can use SIXCONs and 400-gallon water tank trailers to deliver bulk potable water to the supported ground units on the forward edge of the battlefield. Hygiene services are provided via a small quantity of portable field shower units that are typically either positioned near a raw water source or centrally located in the RLT's battlespace. The CLB does not possess the TWPS due to the large ground footprint that is required to install and operate it. The CLB does possess and operate the LWPS. It also possesses and uses the platoon water purification system (PWPS) to produce water to meet short-term (less than 30 days) water quality standards. The combat logistics company of the MLG CLB contains a water section that generally consists of less than a squad sized detachment of water support technicians (military occupational specialty [MOS] 1171).

2-62. The MEU-sized MAGTF possesses an organic CLB. The MEU CLB contains a water section that is located inside the battalion's reinforced engineer platoon. This engineer platoon provides general support

and general engineering to the entire MEU. It can produce bulk potable water, platoon-sized potable water, and operate field showers by using its organic equipment (lightweight water purification system [LWPS], collapsible storage tanks, hoses, and field shower unit).

ENGINEER SUPPORT BATTALION

2-63. The ESB provides general engineering support to a MEF-sized or Marine expeditionary brigade-sized MAGTF. The ESB contains the personnel, equipment, and command and control mechanisms necessary to conduct simultaneous water support operations across the MAGTF's battlespace. Its core competencies include executing water support operations and providing hygiene services. The battalion maintains a more robust water support capability and capacity than the CLBs of the MLG. Additionally, the ESB has a larger quantity of water purification equipment including the TWPS, LWPS and the PWPS, which allow it to purify fresh, brackish, or salt water. It can use the PWPS to operate multiple platoon-sized potable water production sites for up to 30 days. The battalion uses small (500 and 3,000-gallon) and large (20,000 gallon) collapsible storage tanks, water SIXCON systems, hoses, and connection sets to store bulk potable water. Water distribution can be accomplished by using SIXCONs, 400-gallon water tank trailers, water pumps, and scalable expeditionary water distribution systems (EWDS). Each EWDS has the capability to distribute water across a distance of 1.4 miles. The EWDS is discussed in appendix A. Hygiene services are provided by a sizable quantity of portable field shower and laundry units that are typically located near a raw water source. These hygiene equipment items can be positioned to support company-level or larger organizations throughout the MAGTF's battlespace. The engineer support company of the ESB contains a large utilities platoon that consists of water support technicians (MOS 1171). There is an ESB in the Marine Corps Reserve Component with similar competencies.

MARINE WING SUPPORT SQUADRON

2-64. The MWSS is organized to provide aviation ground support directly to a composite Marine aircraft group. The squadron's primary purpose is to sustain the OPTEMPO in terms of sortie generation for the supported Marine aircraft group and attached elements of the Marine air control group. This can be accomplished from either a sea base (comprised of amphibious warships), shore-based air installations (bare base or expeditionary airfield), or a combination of both. The MWSS executes water support operations to address personal consumption, aviation maintenance, hygiene service, aircraft rescue and firefighting, CBRN decontamination, and dust abatement requirements of the supported Marine aircraft group. The MWSS possesses the TWPS, LWPS, and PWPS, which allow it to purify fresh, brackish, and salt water. It also possesses collapsible storage tanks (3,000 and 20,000-gallon), SIXCONs, hoses, and connection sets to store bulk potable water. To distribute bulk potable water, the MWSS can use SIXCONs, 400-gallon water tank trailers, water pumps, and the EWDS. The MWSS provides hygiene services by using organic portable field shower and laundry units. The MWSS engineer company contains a squad of water support technicians (MOS 1171). There is an MWSS in the Marine Corps Reserve Component with similar competencies.

2-65. Other Marine Corps units, such as the artillery regiment, combat engineer battalion, and all infantry battalions of the Marine division are organized and equipped to provide internal platoon and squad-based water purification using the PWPS. Water produced by the PWPS is distributed using 5-gallon water cans or collapsable water bladders.

Chapter 3

Planning for Water Support Operations

Military leaders face problems that often require unique and creative solutions. Planning provides an informed forecast of how future events may unfold. It entails identifying and evaluating courses of action, potential decisions, and consequences of decisions. Planning involves thinking about ways to influence the future to respond to potential events. Put simply, planning is thinking critically and creatively about what to do, how to do it, and what can go wrong along the way.

THE PLANNING PROCESS

3-1. *Planning* is the art and science of understanding a situation, envisioning a desired future, and determining effective ways to bring that future about (ADP 5-0). Planning helps commanders create and communicate a shared understanding between themselves, their staffs, subordinate commanders, and unified action partners. Planning results in a formal plan and orders that synchronize the action of forces in time, space, and purpose to achieve objectives and accomplish missions.

> ***Critical Water Planning Tasks***
>
> In any operational context and at any echelon, water planners must accomplish the following tasks:
>
> - **Determine Requirements.** This is key to water planning. Determining requirements is the foundation for all other water planning. Use the Water Planning Guide and TB MED 577.
> - **Cross-reference the supporting unit structure and mission vs. usage data.** The time-phased force and deployment data has the structure. For usage data, consult OPLOG Planner and historical data.
> - **Determine the Capabilities Required to Fulfill the Need.** Use the Force Management System (FMSWeb).
> - **Build the Concept of Support.**

3-2. Planning for water support is both a continuous and cyclical activity of the operations process. Planning starts as an iteration of the operations process, but planning does not stop with the production of an order. The most important factors for sustainment planning are requirements, capabilities, and shortfalls. Planning may be highly structured, involving the commander, staff, subordinate commanders, and others to develop a fully synchronized plan or order.

3-3. A product of planning is a plan or order—a directive for future action. Planning helps leaders—

- Understand and develop solutions to problems.
- Anticipate events and adapt to changing circumstances.
- Task-organize the force and prioritize efforts.

3-4. A problem is an issue or obstacle that makes it difficult to achieve a desired goal or objective. Planning helps commanders and staffs understand problems and develop solutions. Not all problems require the same level of planning. Planning for water support will present different problems that planners must forecast early in the planning process. Initial reception, staging, onward movement, and integration production and distribution requirements are much different from those required for the offensive or defensive phases of operations. Production and distribution planning will require anticipation, prioritization, modification of the original task organization, and constant updates of consumption estimates.

3-5. Planning considerations are matters or factors taken into account when formulating a plan. Planning considerations include conditions, events, actions, or requirements that planners expect to encounter during an operation and must make allowances for if they do occur. These considerations are put in terms of a known or anticipated support requirement, a known or anticipated problem, a readiness issue, a capability shortfall, enemy threat, or an aspect of operational or mission variables. If identified and used properly, these considerations assist planners in identifying specific support or operational requirements based upon available information.

3-6. Similar to assumptions when initially identified, planning considerations are suppositions based on knowledge of current and future events. As planners gather more information and the operational situation

becomes clearer, a planning consideration may prove to be false or unreasonable. Once identified and listed, planners should analyze and prioritize the considerations based on criticality and the probability that the consideration will prove to be true. Planners should identify second and third-order effects associated with each planning consideration to ensure comprehensive planning. Appendix D of JP 4-03 provides an example set of planning considerations and assumptions for supporting a joint task force deployment in Africa.

3-7. The defining challenges to effective planning are uncertainty and time. Planning provides an informed forecast of how future events may unfold. It entails identifying and evaluating potential decisions and actions in advance, to include thinking through consequences of certain actions. Planning involves thinking about ways to influence the future as well as how to respond to potential events. Put simply, planning is thinking critically and creatively about what to do and how to do it, while anticipating changes along the way.

3-8. A key aspect of planning is organizing the force for operations. Through task organization, commanders establish command or support relationships and allocate resources to weight the main effort. In addition to task organizing, commanders establish priorities (for example, priorities of support, fires, sustainment, protection, and information) so that the main effort has sufficient combat power to achieve success.

3-9. Effective water support operations require making detailed plans using the military decision-making process (MDMP). Figure 3-1 provides an overview of MDMP. See FM 5-0 for additional information on MDMP.

3-10. Marines use the Marine Corps Planning Process (MCPP), which includes six steps: problem framing, course of action development, course of action war game, course of action comparison and decision, orders development, and decision. Even though these steps are presented sequentially, planning seldom occurs in a straightforward, linear manner. MCWP 5-10 focuses primarily on commanders with staffs; however, any Marine required to plan operations should know the planning process well enough to determine the problem, envision a desired end state, and develop options for achieving that end state.

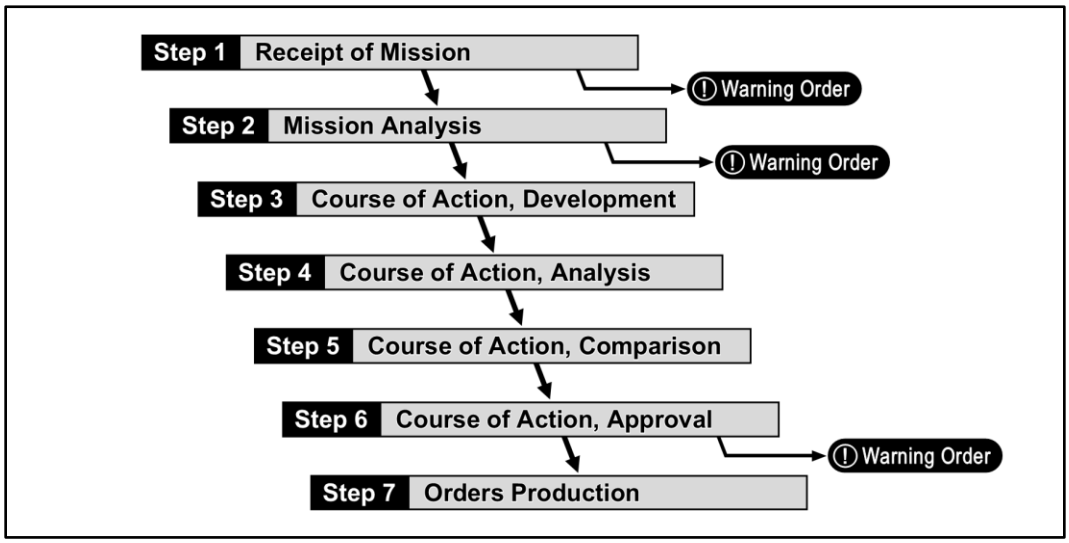

Figure 3-1. Military decision-making process

OPERATIONAL ART IN SUSTAINMENT

3-11. Army commanders of maneuver and sustainment units use operational art to develop a vision of how to establish conditions that accomplish water support. Commanders and staffs use operational art to develop strategies and operations to organize and employ tactical forces. Army commanders use operational art to pursue strategic objectives through the arrangement of water support units in time, space, and purpose. Operational art allows commanders to translate an operational approach into a clear and concise concept of operations that is disseminated in an OPORD.

3-12. The Army design methodology can be used to shape an operational approach. Through this methodology, commanders and staffs gain an understanding of the current state of the OE. It allows them to

envision a desired end state, identify problems that will prevent achieving the end state, and then develop a broad, general plan to solve the problems. From this point, commanders use MDMP to develop a detailed plan that includes a concept of operations.

3-13. Maneuver and sustainment commanders use the elements of operational art to understand the OE to develop a concept of operations. These elements can be used selectively in any operation as required, and not all apply at all levels of warfare. The elements are—

- End state and conditions.
- Center of gravity.
- Decisive points.
- Lines of operation and lines of effort.
- Tempo.
- Phasing and transitions.
- Culmination.
- Operational reach.
- Basing.
- Risk.

3-14. Commanders of maneuver and sustainment units must consider these elements in planning. With equal consideration, each element can be used to develop a concept of support that synchronizes and integrates sustainment operations with the other warfighting functions. Examples of how this can be done are listed below:

- Determine what water source, production, storage, and distribution capability is required, and where it must be located to achieve the desired end state. Establish desired conditions such as required on-hand days of supply (DOS) or operational readiness rates. Consider any additional items needed based on the OE.
- Analyze how water support will affect the desired speed of the operation, and if sustainment will allow maneuver forces to maintain a higher OPTEMPO than the enemy. Understanding the status of bulk fuel, water, and ammunition is critical to controlling the tempo since these commodities directly affect movement and maneuver. Commanders must ensure the maneuver tempo does not outpace the sustainment support; combat effectiveness rapidly degrades if forces are cut off from water.
- Determine if water support should be considered a center of gravity for the operation. Identify critical components of the water support structure, such as specific storage and distribution assets that could cause failure if destroyed or damaged. Mitigate this by considering additional protective measures such as building berms around critical water production equipment, increasing dispersion between equipment, establishing redundant water points, and fabricating decoys of water equipment.
- Determine the level of risk to accept when committing sustainment forces. Commanders must balance the risk with the potential favorable outcome. As an example, a commander might commit an entire transportation company to move HIPPOs to resupply the main effort but must accept the fact that doing so will jeopardize future operations if the water assets are destroyed by enemy action.
- Analyze the effects of water support in allowing a commander to reach decisive points. For example, analyze the amount of water on hand and the resupply rate to determine if the status is adequate to sustain the main effort in accomplishing its mission or seizing and defending its assigned position.
- Consider what types of basing (such as an intermediate staging base or temporary base camps) are required to execute water support. This includes well-designed positioning, dispersion, protection, and the command and control required to control the bases.
- Determine how water support affects lines of operation and lines of effort. Ask if water support will affect the supported force's ability to seize and control key terrain. The same should be done for lines of effort. Commanders should analyze how water support affects fires, protection, and movement and maneuver.
- Operational reach is closely tied to culmination since the culmination point is normally the limit of a unit's operational reach. Commanders must always know the point at which the operation will culminate due to water production, storage, and distribution limitations. Lack of potable water might cause the operation to culminate sooner than planned and result in the force being unable to complete

the assigned mission. Sustainment commanders and staffs should be able to determine the culmination point and communicate it to the maneuver commander for consideration. This information can be used to plan a deliberate transition from offense to defense.

- Water directly affects endurance and the ability to employ combat power for extended periods. Analyze the effect water support has on completing the current phase or role of an operation and transitioning to the next role. Commanders and their staffs should use stockage estimates to determine if changes need to be made to meet operational objectives. Identify the changes to the plan and the specific support required to complete the phase.

PLANNING CONSIDERATIONS BY WARFIGHTING FUNCTION

3-15. The following sections discuss water support planning considerations that are related to Army warfighting functions. Army sustainment and water support planners use these considerations. For simplicity, the discussion only focuses on the most common planning factors germane to water support operations. FM 4-0 discusses broader aspects of logistics and sustainment planning considerations that are applicable to other supply commodities.

- Command and Control.
  - Identify the water support forces that will support operations. Commanders will determine what risk is acceptable in attaching sustainment units to the reserve.
  - Assess water unit task organization frequently to ensure it is adequate and positioned properly to support the sustainment mission. Plan for replacement of units that become combat ineffective due to enemy actions.
  - Evaluate the task organization of the supported unit and how it affects the water support design.
  - Expect enemy attacks on space and cyberspace domains and the electromagnetic spectrum, which will degrade communications and digital information transmission. Attacks on these domains affect sustainment operations in terms of satellite communications, positioning, navigation, timing, information collection, internet operations, computer systems, and radio communications. Commanders must develop and execute a primary, alternate, contingency, and emergency communications plan, ensuring redundancy. Pushing supply deliveries on a regular schedule, especially during area defense operations, eliminates the need to request supplies and reduces the chance that a lapse in communication will jeopardize the operation. FM 6-99 contains standardized report and message formats.
- Movement and Maneuver.
  - Expect sustainment water distribution elements to operate outside the unit boundaries and beyond the forward line of troops while supporting covering, guard, screening, counter, and spoiling attack forces. Sustainment units must understand operational control measures, to include passage of lines with maneuver forces in perimeter defense.
  - Understand and anticipate how terrain, friendly-force-deployed obstacles, fire support coordination measures, and movement restrictions will affect water distribution. Consider these factors in all distribution management and movement control plans.
  - Coordinate with movement control units for road usage or to deconflict during distribution operations. This is critical to ensure that uncoordinated or conflicting unit movement on available routes does not hinder distribution. Commanders must identify main and alternate movement routes.
  - Coordinate with the consolidation and support area terrain managers to synchronize airspace for aerial delivery, airland delivery, and air medical evacuation requirements.
- Intelligence.
  - Understand the enemy force's capability and capacity in terms of most dangerous and most likely courses of action. This aids in planning unit protection operations. Understand how enemy threats affect sustainment operations.
  - Understand the OE through analysis of all the mission variables. Understand how each variable affects sustainment operations.
  - Provide geospatial intelligence hydrology products for the AO.
  - Provide civil considerations related to the local water supply.
- Fires.
  - Fires units require distribution to multiple and potentially dispersed forward locations.

  - Fires units frequently reposition due to tactical tasks and enemy responses (such as counter battery). Sustainment units supporting them require similar mobility.
  - Planners need to ensure that units supporting fires units are mobile and can support on the move.
- Sustainment.
  - Plan for execution of all sustainment functions and associated subfunctions at all echelons including personnel services, health service support, and logistics. This includes personnel replacement, casualty reporting, medical treatment, field services, organic and area medical support, hospitalization, dental care, clinical laboratory services, treatment of CBRN patients, medical evacuation, and medical logistics and supplies.
  - Prioritize main effort water support for all operations. Plan for all sustainment functions required to build combat power: personnel, supply, maintenance, and health service support. Pre-position food, water, bulk fuel, fortifications, ammunition, medical supplies, and repair parts centrally and well forward. Consider the use of mission-configured loads. Balance forward positioning of resupply and rapid mobility.
  - Plan for transportation assets to support water distribution operations. Coordinate with the CSSB to assist maneuver brigades when the BSB is in retrograde movement.
- Protection.
  - Plan for increased requirements for CBRN defense equipment. CBRN threats create an increased requirement for disinfected or treated water and non-potable water. Non-potable water is not a quartermaster function, but this requirement could affect supply routes and transportation allocation. CBRN decontamination plans should address the safe containment and disposal of water contaminated during the treatment of vehicles, equipment, and human remains. Disinfected or treated water will be used to conduct personnel decontamination (post CBRN attack). Runoff water from personnel decontamination will need to be contained.
  - *Force health protection* includes measures to promote, improve, or conserve the behavioral and physical well-being of Service members to enable a healthy and fit force, prevent injury and illness, and protect the force from health hazards (JP 4-02). Operational public health services are offered according to the policies and responsibilities established in AR 40-5 and DA Pam 40-11. Planners should analyze which units complement each other when planning when and where to deploy the units that provide field services. For example, water purification units support the field service companies that provide shower and laundry services.
  - Protecting water purification and storage sites will be key to unit operations. Planners must also consider requirements for protecting water purification and storage sites from CBRN hazards.
  - Expect direct enemy attack by small unit and special operations ground forces, attack aircraft, and long-range fires. Commanders must ensure that base defense measures are adequate to detect and defeat small unit operations (level I or level II threats). Units must use adequate cover and concealment measures to prevent detection by enemy forces. Dispersion and redundancy can be used to mitigate the effects of enemy long-range fires and attack aircraft.

WATER FORCE STRUCTURE PLANNING

3-16. Sustainment commanders and water materiel managers must be able to adapt to the changing requirements of the theater. Sustainment units supporting Army operations provide water purification, bulk water storage, and distribution within the operational context of competition, crisis, and conflict to ensure freedom of movement, operational reach, and prolonged endurance. Each operational context creates varying support requirements. Successful water planning is dependent on accurately determining water demand.

WATER PLANNING DURING COMPETITION BELOW ARMED CONFLICT

3-17. Army operations during competition below armed conflict help set the conditions for the successful execution of operational plans. Army forces conducting operations during competition continually seek to gain and maintain an advantageous position against specific adversaries. Setting the theater is a large component of the activities conducted during competition below armed conflict. Setting the theater involves providing water support to units engaged in activities that include military engagements, security cooperation, combined training and exercises, and sustainment preparation of the OE. The theater Army develops a theater logistics analysis as part of setting the theater. This analysis includes an assessment of transportation assets, including pipelines and railways. The TSC contributes to this analysis by completing a

sustainment preparation of the OE. Advance water analysis, planning, preparation, and coordination are critical to successful water support operations.

3-18. *Sustainment preparation of the operational environment* is the analysis to determine infrastructure, physical environment, and resources in the operational environment that will optimize or adversely impact friendly forces means for supporting and sustaining the commander's operations plan (ADP 4-0). Sustainment preparation of the OE is continuous throughout competition. Water materiel managers and planners at the TSC and ESC use the sustainment preparation of the OE analysis to create, update, and refine sustainment estimates and the concept of support. Analysis products cover such topics as identification of potential water sources, consumption estimates, determination of water stockage objectives for DOS, number, and types of water support elements, LOCs, and design of a water distribution infrastructure for the theater.

3-19. Water sources and other geographical information influence the design of the water distribution network. Planning considerations include—

- Water source purity and its effects on how much water can be processed daily by individual purification machines.
- Placement of water production as close as possible to end users to reduce transportation and distribution requirements. Sources available may be limited.
- If close proximity purification is not possible, consider the possibility of storing large quantities of water centrally and forward.
- Distribution requirements for units that are geographically distant or difficult to access may require special means of delivery. These include large, infrequent deliveries of water or the use of aerial transportation.
- Local climate (including precipitation), flood risks, and extreme temperatures have effects on how much raw source water will be available.
- Consider using existing transportation networks, including viable roads, rail lines, pipelines, and waterways.

3-20. Planners will identify what local infrastructure and contracted support are available in the theater, including identifying all host-nation laws, prohibitions, and permissions. Assume host-nation or local water is unsafe to consume when used. PM personnel must certify all potable bottled water procured from veterinary service-approved local vendors, DLA, or elsewhere before consumption. Bottled water is significantly more expensive and has different transportation and distribution requirements than bulk water. Cooperation and compliance with local laws facilitate the transition between military and civil use of preexisting assets.

3-21. During competition, planners use tools such as OPLOG Planner, which produces supply consumption estimates for all classes of supply including water. OPLOG Planner can estimate for units at any echelon from team to Army headquarters and can differentiate between offensive and defensive operations. It also provides an analysis of the estimated transportation assets needed to get the supplies to supported units. Sustainment planners answer a series of questions about mission, enemy, terrain and weather, troops and support available, time available, civil considerations, and informational considerations to generate supply estimates for each class of supply. Another useful tool for determining water consumption requirements is the Water Planning Guide.

3-22. Tactical water support during competition includes providing water support to any personnel deployed into theater. Generally, the number of deployed personnel is smallest during competition. A sustainment brigade, CSSB, quartermaster (POL and water) group, or TPWG provides sufficient oversight of daily water support to personnel in theater.

3-23. Units in garrison also conduct operations during competition. Training, education, and maintenance are activities conducted as part of operations during competition. Regular drills and training ensure that water units can operate effectively and identify possible shortfalls and deficiencies.

WATER PLANNING OPERATIONS DURING CRISIS

3-24. The Army conducts operations during crisis for two purposes. The first is to deploy Army forces rapidly to provide deterrence capability or, if necessary, compel an adversary to cease or reduce the actions that

threaten U.S. national interests. Water planning during crisis is similar to operations during competition below armed conflict. The refinement and validation of the sustainment preparations carried out during competition operations is the main activity for operations during crisis. If necessary, this refinement will allow for the timely and effective transition to armed combat. Planners consider the water support capacity available through organic assets and existing force structure. The availability of commercial support to fill existing gaps in capacity will be particularly important during the early stages of operations during a crisis, and it may change rapidly due to enemy activity or host-nation policy.

3-25. The Army has Title 10 responsibility for inland storage and distribution of bulk water. As the executive agent for water management, the Army must plan to support the total ground force in theater. The supported force may include the Army; joint and multinational Services; other agencies; allies; local populations; and prisoners of war. Tools such as OPLOG Planner and the Water Planning Guide may be used to estimate total force daily water consumption. The water consumption estimate is used to determine how many water purification units and what storage capacity and additional transportation assets are required to support the total force. As the force structure and task organization are validated, the distribution network may need adjustments to meet emerging sustainment requirements.

3-26. During crisis, the TSC, ESC, and sustainment brigades continuously verify and refine sustainment plans. The TSC and ESC work together to link the global distribution network and strategic partners to the tactical level. The TSC or ESC establishes movement control boards and materiel coordination boards to support theater distribution operations. Sustainment commands provide command and control of assigned and attached functional and multifunctional organizations executing the distribution plan.

3-27. As a part of supporting operations during crisis, water materiel managers need to plan for—

- Validating the water requirements for all supported forces.
- The buildup of DOS stockage objective.
- Forward positioning of water stocks.
- Maintaining water potability standards.
- Securing border nation supply routes.
- Securing critical water infrastructure to include elements of the transportation network.

WATER PLANNING OPERATIONS DURING CONFLICT

3-28. Operations during conflict require greater sustainment planning than the other operations because of their higher OPTEMPO, greater lethality, and significantly increased consumption of supplies and use of equipment. Sustainment commanders and water materiel managers at all echelons must completely understand the maneuver concept of operations during conflict. This enables sustainers to understand and anticipate the requirements necessary to support current and future operations. Continual interaction with the supported unit provides water materiel managers the information to plan, prepare, execute, and assess water purification and supply functions. Water planning should be conducted in parallel and collaboratively with operational planning to ensure sufficient support.

3-29. Commanders use quartermaster and transportation assets to deliver water. The flexibility to redistribute water support assets across the battlefield enables the commander to support the main effort as conditions change. The demand for transportation assets may be a limiting factor in supplying water. Placing purification units and stocks centrally and well forward will reduce the transportation requirement. For example, a CSC providing water purification to a maneuver brigade may be positioned within the brigade AO to minimize the transportation requirements. During contested combat operations, it will be more difficult to distribute water to units that are distant, unable to access main supply routes, or in constricted environments. Of note, units in constricted environments adopt short-term potability standards. Distribution and transportation planners should consider all modes of transport (road, rail, waterway, aerial, and pipeline). See ATP 4-11, ATP 4-14, ATP 4-15, and ATP 4-48 for information on executing operations with each mode of transportation.

3-30. The OE and mission variables affect actual daily consumption rates. Meeting the demand will be a challenge and requires a robust and adaptable water support network to maintain sustainability, endurance, and OPTEMPO. Medical treatment and mortuary affairs have increased demand for water support in this role; this increased demand may include a demand for ice. In theaters with enemy CBRN threats, disinfected/treated and non-potable bulk water demands will increase.

3-31. Protection for the water distribution network is a consideration during conflict. Positioning water support elements requires a balance between efficient distribution capabilities and the ability to provide security. Achieving this balance requires analyzing the battlefield to identify potential bottlenecks or other areas where forces are at risk of being cut off from supply routes or LOCs. Water units do not typically relocate beyond the boundaries of a maneuver security area. The headquarters that owns the terrain where a water company or platoon is operating (such as a corps or division) coordinates a security escort when water units are directed to relocate outside secure boundaries or into contested areas. The maneuver headquarters also coordinates movement between friendly lines. For example, a water support company moving from the corps area to the division area requires the corps to coordinate a security detail until the division receives it. Local security is an inherent responsibility for units that are operating a water production site.

3-32. LOCs are contested during conflict. Digital communication networks may be disrupted, and manual reporting using pencil and paper may be required. Contingency plans such as pushing regular deliveries will ensure that forces do not run out of water. Emergency resupply requests should not be used to circumvent normal supply procedures.

3-33. Planning considerations for water materiel managers before and during conflict operations include—

- Computing water stockage levels for all supported supply points based on commander's guidance.
- Forecasting water requirements to support current and future operations.
- Receiving, validating, and filling requisitions from supported supply points by cross-leveling from other supply points or by throughput from higher sources of supply.
- Maintaining visibility of shipments between units and supply points.
- Receiving, validating, consolidating, packaging, and forwarding daily water status reports.
- Anticipating increased time between resupply intervals as the distance from supported and supporting units increases.

3-34. When directed, Army forces transition back into competition below armed conflict by providing sufficient capacity and capabilities to protect civilian populations and execute or support stability operations. Army operations during competition below armed conflict include activities to make any temporary operational success enduring and set the conditions for a sustainable environment. The end goal of competition below armed conflict is a transition of control to legitimate civil authorities. During competition below armed conflict, commanders continuously consider activities necessary to achieve the end state. Water support operations during competition below armed conflict are similar to operations during conflict. Water materiel managers continue to provide water and sustain combat power. In some instances, priorities shift from military use of water and retrograde of materiel to stabilization or humanitarian efforts.

3-35. Maneuver or other units that are temporarily located in an area or that are being retrograded may require water support. Water units tasked with area support are more easily able to accommodate requests of this kind. Units that are not tasked with area support provide water based on the supported unit commander's priority. The consolidation area requires security forces to conduct water support during competition below armed conflict. Water support is required for any U.S. forces remaining in theater to prevent recurrence of hostilities, provide security, or that are working to transition to civil or other legitimate control.

3-36. Humanitarian aid includes providing water and treatment to prisoners of war, local, and displaced populations. Water consumption estimates should account for such aid; however, it may be difficult to predict the duration and complexity of these operations. Experience indicates that estimates are frequently insufficient, and preparations need to be made for extended durations. Immediate humanitarian needs are always the highest priority of effort when restoring essential civilian services.

3-37. Water is a critical necessity for returning life to normal. If water was available before operations during conflict and then is unavailable after the fight, the local population may be difficult to pacify and could harbor resentment toward U.S. forces. A supply of fresh water alone does not guarantee good will, but a lack of water certainly causes unrest.

3-38. Reconstruction of local infrastructure are actions during competition below armed conflict. Combat operations may damage or destroy existing roads, bridges, canals, airfields, port facilities, and rail systems. Sustainment forces coordinate with engineer elements (who will need water support) for repair or replacement of LOCs. Planners should plan for multiple modes of resupply. A detailed plan to transition to

civil authority may require military assistance or the use of contracted support where U.S. agencies are unable to assist.

WATER PLANNING BY ECHELON

3-39. Water is a limiting factor that affects agility, depth, and operational endurance. Water planners must identify and track changing requirements and allocate resources to mitigate shortfalls and increase efficiency. Planning for water support begins with determining the quantity and quality of potable water required. The estimate of potable water required will depend on several factors including the commander's guidance, the threat condition, and the analysis of mission variables. The potable Water Planning Guide provides commanders and logistics staff planners at all echelons with a water sustainment-planning tool. Information in the Water Planning Guide will enable logistics planners to assess capabilities and identify water purification, storage, and distribution requirements before the commencement of operations. In regions with an extreme environment, the commander may issue water restriction guidance to conserve and prioritize water supplies. Leaders at all levels should be aware of the quantity and quality of the potable water supply due to its direct effects upon human performance and survival.

3-40. The proper force structuring of water support and the time-phased deployment of units within that structure is an iterative process. It is developed by senior headquarters (including the corps or TSC) and organizational integrators who consider the operational scenario, strategic lift availability (sorties), and pre-positioned supplies and equipment. The process normally begins with the identification of the force size and planned troop deployment rate. Time-phased water requirements are then estimated using unit water planning factor tables. Sustainment commanders and staffs must assess the adequacy of water capabilities and request additional capabilities as required. Commanders then select and schedule units for deployment in a manner that ensures treatment, storage, and distribution capabilities are consistent with requirements.

THEATER SUSTAINMENT COMMAND

3-41. The TSC is responsible for supply planning, forecasting, and establishing supply stock levels at each support echelon to meet mission requirements. The TSC may be task-organized with ESCs, sustainment brigades, and/or functional logistics organizations to support multidomain operations. The theater Army G-3 is responsible for supervising planning for the theater. The G-3 coordinates with the G-4 during planning to ensure that operations are logistically supportable. The TSC focuses on operations more than 30 days in the future.

3-42. The theater Army G-4 prepares annex F (Sustainment), annex P (Host-Nation Support), and annex W (Operational Contract Support) of the theater Army OPORD or operation plan. The operational contract support annex includes appendixes 1, 2, and 3 to ensure that contracting support unit requirements to deploy are identified, and that contractor personnel and contractor management are planned and sustained in the expeditionary force AO.

3-43. The theater Army issues an order to the TSC with a concept of operations. The TSC commander plans for theater distribution based on the requirements of the operational concept. This includes positioning of water units in support of the operational concept. All of this is included in the TSC order prepared by the G-3 and issued by the commander to subordinate units describing their support tasks. It also informs the G-4's sustainment annexes referenced above.

3-44. The fuel and water branch in the DMC staff analyzes water support requirements in the AOR. The size and arrangement of the force determine the amount of water required and the size and layout of the distribution network. The TSC also sets the theater stockage objective, including a goal for the number of DOS to be on hand. The stockage objective is not fulfilled immediately; it is built up over time. The TSC also determines the timeline for achieving required stockages levels. The fuel and water branch—

- Monitors and assesses water operations for impact on future operations.
- Prepares water operations requirements for current and upcoming major operations and battles.
- Analyzes and recommends resolutions for all issues involving water.
- Validates requirements for local procurement.

3-45. The TSC and ESC surgeon sections advise the commander on the health of the force. Among the many duties associated with Army Health System (AHS) support, the TSC surgeon section monitors and coordinates operational public health functions. The TSC surgeon responsibilities are listed below:

- Advises commanders and assists them with recognizing the importance of the sanitary control and surveillance of field water supplies in planning operational missions.
- Implements or oversees implementation of operational public health procedures and instructions required for ensuring the security, adequacy, and quality of field water supplies.
- Provides medical oversight of field water supply operations for the prevention of waterborne diseases.
- Ensures that results of field water quality analyses are documented and reported. These analyses indicate the potential for immediate and acute health threats as well as those that may cause chronic or long-term health effects.
- Makes recommendations to commanders for applying risk management principles to water supply decisions, including risk management-based responses to analytical results of water quality tests.

3-46. The distribution integration branch (DIB) plans distribution of supplies forward into the support area based on a combination of available storage, distribution assets, and anticipated customer demands. The branch provides theater on-hand visibility and recommends priority of issue. The DIB manages water distribution throughout the theater for military, contracted, and locally procured assets. It coordinates with other branches in the DMC as well as strategic partners like Defense Logistics Agency Energy to monitor and manage theater stocks.

EXPEDITIONARY SUSTAINMENT COMMAND

3-47. An ESC can be attached to a TSC or a field army. The different parent units have different requirements for an ESC; therefore, each type of ESC has a unique scope of responsibility.

3-48. When the ESC is attached to the TSC in support of the theater Army—

- The ESC conducts planning similar to a TSC, but its focus is upon a joint operations area. The primary roles of the ESC are supply planning, forecasting, and establishing supply stock levels at each support echelon to meet mission requirements.
- The TSC issues an order to the attached ESC with a concept of support. Based on the requirements of the plans for theater distribution, the DMC prepares, and the ESC commander issues, a concept of support. This includes positioning of water units in support of the operational concept. All of this is included in the ESC OPORD prepared by the ESC G-3 (with extensive coordination from the DMC) and issued by the commander to subordinate units describing their support tasks. It also informs the G-4 sustainment annexes referenced above.

3-49. When the ESC is attached to a field army—

- The field army issues an order to the ESC with a concept of operations. Based on the requirements of the operational concept, the ESC commander plans for water distribution in the joint operations area. This includes positioning of water purification units in support of the operational concept. All of this is included in the ESC order prepared by the G-3 and issued by the commander to subordinate units describing their support tasks. It also informs the G-4's sustainment annexes referenced above.
- The fuel and water section staff plans, recommends resourcing for, monitors, and analyzes water support in the AOR. ESC plans are informed by the plans of the field army. The size and arrangement of the force are considered when determining how much water is required and the size and layout of the distribution network. The ESC also sets the stockage objective for the field army (in accordance with the theater stockage objective set by the TSC), including a goal for the number of DOS to be on hand. The stockage objective is not fulfilled immediately but is built up over time. The TSC also determines the timeline for completing the DOS build up.

3-50. The corps sustainment command is assigned to a corps. During operations—

- The corps G-3 develops a concept of operations, and the G-4 coordinates with the corps sustainment command to execute sustainment operations in support of the G-3's concept. The corps sustainment command normally provides general support with units in local proximity. The G-4 has responsibilities to develop, project, and validate water requirements in support of operations as well

as receive, consolidate, monitor, and communicate water support requirements through support channels during operations.

- The corps sustainment command plans for the next operation to be carried out in the forthcoming 72-96 hours. Logistics status (LOGSTAT) and other data collected by the sustainment brigades is passed up to the command for analysis. Some general considerations include—
  - Changes to anticipated consumption rate.
  - Any incident or change having significant impact to the operational capability of a logistics unit.
  - Any incident or change having significant impact on the logistical posture of any tactical unit.
- The fuel and water section staff plans, recommends resourcing for, monitors, and analyzes water support in the corps AO. The command's plans are informed by the plans of the corps. The size and arrangement of the force are considered when determining how much fuel is required and the size and layout of the distribution network.

3-51. The ESC/CSC DIB plans distribution of water forward into the support area based on a combination of available storage, distribution assets, and anticipated customer demands. The branch provides theater on-hand visibility and recommends priority of issue.

3-52. The fuel and water section manages bulk water distribution throughout the joint operations area by using military, contracted, and locally procured assets. It coordinates with other branches in the DMC and strategic partners to monitor and manage theater stocks. The fuel and water section staff plans and coordinates water support with subordinate organizations.

3-53. ESCs supporting at the operational level focus on fuel and water supply more than two weeks in the future. The corps sustainment command focuses on operations approximately 96 hours in the future. In each case, the ESC/CSC G-4's focus is on near-term internal water support, whereas the SPO's concern is external water support extending out to 96 hours.

SUSTAINMENT BRIGADE

3-54. The sustainment brigade supports Army forces at the tactical and operational levels, providing support to maneuver brigades; multifunctional and functional support brigades; deployable, self-contained division and corps headquarters; and other units operating in its assigned support area. The sustainment brigade planning horizon does not usually extend beyond 72 hours; it is concerned with completing the current mission. ESC plans for the next operation are translated into daily requirements and plans by the sustainment brigade. See ATP 4-91 for in-depth information.

3-55. The sustainment brigade SPO staff plans and coordinates external support operations. It aggregates all supported unit requirements and determines the overall requirement. The brigade SPO section balances external sustainment support requirements with the brigade's sustainment capabilities. If shortfalls are unable to be addressed by assets contained within the sustainment brigade, then the sustainment brigade SPO relays a request for support to the appropriate higher echelon, usually the ESC.

3-56. The sustainment brigade requires the LOGSTAT reports from all subordinate tactical units. LOGSTAT reports include the amount of water on hand and a projected on-hand amounts over the next 24, 48, and 72 hours.

3-57. Brigade standard operating procedures (SOPs) define LOGSTAT format, report time, and analog and digital redundancy requirements. It is most effective to coordinate with the division G-4 to agree on a uniform date time stamp on all subordinate LOGSTAT reports. In some cases, the reporting interval for daily reports may be described in the division's operations SOPs. An example LOGSTAT report can be found in appendix C. This requirement allows for an accurate snapshot of stockage levels by minimizing the uncertainty caused by anticipated deliveries or recounted supplies. The SPO and S-4 staff sections within the sustainment brigade can calculate a more up-to-the-minute report by factoring in scheduled deliveries, consumption rates, and production.

3-58. The SPO conducts commodity management of general supplies, including water. The materiel management branch determines requirements and recommends priorities for the allocation and distribution of supplies. It monitors the requisition of commodities and makes recommendations for redistribution within

the brigade's assigned area. It maintains visibility of on-hand and in-transit supply stocks using automated logistics systems.

3-59. The sustainment brigade surgeon plans, coordinates, and synchronizes the force health protection of the sustainment brigade. These measures involve several protection functions including select operational public health and veterinary services used for food, water inspections, and surveillance. The brigade surgeon's duties also include coordinating with the next-higher command surgeon and medical brigade commanders for health service support of the sustainment brigade.

3-60. The general supply section within the material management branch controls, manages, and directs the receipt, storage, and distribution of supplies to supported units within the sustainment brigade AO. The branch's fuel and water section controls and manages the bulk fuel and water supply to supported units. It also directs the receipt, storage, inspection, testing, quality, issue, distribution, and accountability of the water stocks for the sustainment brigade AO.

3-61. The distribution plan outlines who, what, when, where, and how distribution will be accomplished. The scope of the distribution plan explains exactly how the sustainment brigade will maintain asset visibility, adjust distribution capacity, and control the distribution of supplies, services, and support capabilities for an AO. The distribution plan outlines the architecture of the distribution system, and describes how units, materiel, equipment, and sustainment resources are to be distributed within the AO. It is continually updated to reflect changes in infrastructure, support relationships, and customer locations.

DIVISION SUSTAINMENT BRIGADE

3-62. The division G-4 develops the division concept of sustainment. It is a written and graphical representation of how the division will employ sustainment assets to support the division concept of operations. The DSB SPO may assist the division staff in developing the sustainment concept but is not responsible for drafting it. The division G-4 has responsibilities to develop, project, and validate petroleum and water requirements in support of operations as well as receive, consolidate, monitor, and communicate water support requirements through support channels during operations.

3-63. The division concept of sustainment identifies sustainment requirements and priorities of support by unit and sustainment element for all phases of an operation or mission. It includes times (based on the initial plan) for when the BSB will push logistics packages to the maneuver units. Knowing logistics package times helps the BSB and maneuver units know when to attempt to make contact (even in periods of degraded communications) and gives the DSSB a sense of the optimal time to push supplies forward to the BSB.

3-64. The concept of sustainment also includes information on division mobility requirements. It is outlined in paragraph 4 and annex F of the division OPORD. Paragraph 4 includes subparagraphs identifying requirements and priorities for each sustainment unit's logistics, AHS, personnel services, and financial management elements. If additional information is required, it is included in annex F. Annex F describes in further detail mission specifics such as maintenance, recovery, transportation, supply, field services, distribution, contract support integration, mortuary affairs, human resources support, financial management, legal support, religious support, band operations, and AHS support. The concept of sustainment is disseminated to the DSB in the division OPORD.

3-65. The DSB commander receives the division OPORD and begins the operations process. The DSB connects strategic and operational plans and requirements with the tactical-level units at division and below that execute those plans. The DSB commander and staff use MDMP to develop a concept of operations to execute sustainment support to meet the division requirements described in the division order. The DSB commander and staff conduct mission analysis to develop a thorough understanding of the division commander's intent, the division mission, and desired end state. The DSB commander restates the DSB mission to include the intent, guidance, and desired end state.

3-66. The SPO and the DSB S-3 ensure that sustainment planning is synchronized with the division operations concept and across all warfighting functions. This is critical to ensure that the concept of sustainment tasks will not conflict with, hinder, or be hindered by division operations or control measures. Continuous coordination and communication between the SPO and division G-4 throughout the planning process are necessary to maintain awareness of changes in the division operations concept.

3-67. The DSB order uses the standard five-paragraph format, with paragraph 3 (Execution) providing the details of the concept of operations. This describes how subordinate units cooperate to accomplish the sustainment mission and establishes the sequence of actions the DSB units will use to achieve the end state. It identifies the tasks to be executed (supply, distribution, AHS, maintenance, recovery), a time and location for execution, and the subordinate units responsible for each task.

3-68. The brigade SPO staff plans and coordinates external support operations. The sustainment brigade SPO staff aggregates all supported unit requirements and determines the overall requirement. The brigade SPO section balances external sustainment support requirements with the brigade's sustainment capabilities. If shortfalls cannot be addressed by assets contained within the DSB, then the DSB SPO relays a request for support to the appropriate higher echelon.

3-69. The sustainment brigade requires the LOGSTAT reports from all subordinate tactical units. LOGSTAT reports include the amount of on-hand stockage levels for all classes of supply, and the projected on-hand amount over the next 24, 48, and 72 hours.

3-70. Brigade SOPs define LOGSTAT format, report time, and analog and digital redundancy requirements. It is most effective to coordinate with the division G-4 to agree on a uniform date-time stamp on all subordinate LOGSTAT reports. This requirement allows for an accurate snapshot of stockage levels by minimizing the uncertainty caused by anticipated deliveries or recounted supplies. The SPO and S-4 staff sections within the sustainment brigade can calculate a more up-to-the-minute report by factoring in scheduled deliveries, consumption rates, and production.

3-71. The concept of operations also includes requirements to coordinate with the ESC for supply replenishment. Additional order products supporting the concept of operations, such as operation overlays, execution matrices, movement control tables, and traffic control overlays may be included in annex C as appendixes or tabs.

3-72. The DSB S-3 publishes the OPORD, which tasks subordinate units to execute the concept of operations. Once execution begins, the DSB S-3 monitors and controls current operations. The SPO focuses on future operations to ensure the DSB is postured to execute sustainment operations to maintain the division's momentum.

DIVISION SUSTAINMENT SUPPORT BATTALION

3-73. The DSSB commander receives the DSB OPORD and begins the operations process. The DSSB commander and staff use MDMP to develop a concept of operations to execute the DSSB's sustainment mission as described in the DSB order. The DSSB commander and staff conduct mission analysis to develop a thorough understanding of the DSB commander's intent, the maneuver brigade mission, and desired end state. The DSSB commander restates the DSB mission, to include the intent, guidance, and desired end state for the assigned mission or operation.

3-74. The DSSB OPORD uses the standard five-paragraph format, with paragraph 3 (Execution) providing the details of the concept of operations. This describes the manner in which subordinate units cooperate to accomplish the sustainment mission and establishes the sequence of actions the platoons will use to achieve the end state. It identifies the tasks to be executed, a time and location for execution, and the subordinate units responsible for each task.

3-75. During the planning process, the SPO identifies any sustainment capability gaps and shortfalls, and coordinates with the DSB for mitigation. Coordination may involve addressing the need for field services, bulk fuel storage and distribution, water purification, bulk water storage and distribution, general supply, transportation, and mortuary affairs support. The concept of operations also includes requirements to coordinate with the BSB for supply replenishment. Ideally, it identifies when and where the DSB is expected to deliver supplies. Additional order products supporting the concept of operations such as operation overlays, execution matrices, movement control tables, and traffic control overlays may be included in annex C as appendixes or tabs.

3-76. The DSSB commander publishes the OPORD that tasks subordinate units to execute the concept of operations. Once execution begins, the commander monitors and controls the current operations. The DSSB

commander and staff constantly conduct distribution management to integrate supplies with available transportation assets and control the movement of those assets according to the distribution plan.

3-77. The DSSB executes the distribution plan developed by the DSB. The DSSB SPO continues to analyze its supported units' requirements. Supported unit logistics staff officers determine their unit's water requirements. The DSSB SPO aggregates and analyzes those requirements to determine the DSSB's support requirements. The SPO considers the mission, running estimates, and unit requirements and balances them with professional experience and judgement to synchronize support and anticipate changes to the support plan.

3-78. Once supported units submit their requirements, the SPO compares them to the estimate and adjusts accordingly. The SPO staff assesses DSSB capabilities against requirements and communicates support requirements that exceed the DSSB's capabilities to the DSB for coordination. The SPO staff considers—

- What logistics resources are available (within the battalion, within the sustainment brigade, and in the operational area).
- Where logistics resources are located.
- When logistics resources are available.
- How logistics resources can be made available.

3-79. The SPO must be thorough when identifying support relationships with supported units. A DSSB has a direct support relationship to a division. The DSSB reviews the task organization of the supported units, paying special attention to the enabling units. The task organization will change as the supported unit transitions through phases of the operation. The supported unit's priority of support may change. The division G-4 communicates requirements to the DSSB SPO. The DSSB SPO analyzes the situation ahead of time to be prepared for possible changes to task organization and associated support requirements.

3-80. A DSSB can be tasked with area support. The DSSB SPO uses guidance from the DSB SPO. The SPO coordinates with the battalion S-3 to ensure awareness of units transiting the area. The SPO reviews the task organization and available orders to determine supported units over time.

3-81. To reduce the possibility of any friction between the SPO and the S-3 staffs, the commander provides clear guidance reference duties, time horizons, and mission handover. The current operations integration cell time horizon is usually anything under 24 hours. The commander may determine to expand or contract the time window. The SPO staff plans for execution 24-96 hours out.

COMBAT SUSTAINMENT SUPPORT BATTALION

3-82. The CSSB executes the distribution plan developed by the sustainment brigade (or DSB, if attached to the DSB). The CSSB commander, upon receiving the distribution plan from the sustainment brigade, develops the commander's intent, which conveys a clear image of the operation's purpose, key tasks, and the desired outcome. The CSSB's subordinate units are typically geographically dispersed across its assigned support area. Delivering the commander's intent face-to-face to subordinate commanders at the same time may not be possible. Sustainment operations require the CSSB to adapt to the changes in the OE and changes to missions of supported units. By understanding the commander's intent and the overall common objective, subordinates are able to adapt to rapidly changing situations and exploit fleeting opportunities.

3-83. The CSSB SPO staff analyzes its supported units' requirements. Supported unit logistics staff officers determine their unit's logistics requirements. The CSSB SPO staff aggregates and analyzes those requirements to determine the CSSB's support requirements. The SPO officer considers the mission, running estimates, and unit requirements and balances them with professional experience and judgement to synchronize support and anticipate changes to the support plan.

3-84. Once the supported units submit their requirements, the SPO officer compares them to the estimate and adjusts accordingly. The SPO staff assesses the task-organized CSSB capabilities against requirements. They consider—

- What logistics resource are available (within the battalion, within the sustainment brigade, and in the operational area).
- Where logistics resources are located.
- When logistics resources are available.

- How logistics resources can be made available.
- Support requirements that exceed the capabilities of the CSSB are communicated to the sustainment brigade for coordination.

3-85. A CSSB can also be tasked with area support. The CSSB SPO officer uses guidance from the sustainment brigade SPO officer. The SPO staff coordinates with the battalion S-3 to ensure awareness of units transiting the area. The SPO staff reviews the task organization and available orders to determine supported units over time. Task organizations are fluid as the organization transitions through different phases of the operation. Likely supported units include—

- Field artillery brigade.
- Maneuver enhancement brigade.
- Military police brigade.
- Engineer brigade.
- CBRN brigade.
- Explosive ordnance disposal companies.
- Medical units.
- Companies and platoons detached from parent units.
- Joint service and multinational units operating in the support area.
- Special operations forces.
- Units transiting the area.

BRIGADE SUPPORT BATTALION

3-86. The maneuver brigade S-3 develops the brigade concept of operations. The brigade concept of sustainment is developed by the brigade S-1 and S-4. It is a written or graphical representation of how the brigade will employ sustainment assets to support the concept of operations. The BSB SPO officer may assist the brigade staff in developing the sustainment concept but is not responsible for it.

3-87. The BSB receives the maneuver brigade OPORD and begins the operations process. The BSB commander and staff use MDMP to develop a concept of operations to execute sustainment support to meet the brigade requirements described in the brigade's order. The BSB commander and staff conduct mission analysis to develop a thorough understanding of the maneuver brigade commander's intent, mission, and the desired end state. The BSB commander restates the BSB mission to include the intent, guidance, and desired end state for the assigned mission or operation.

3-88. The BSB SPO section and S-3 ensure that sustainment planning is synchronized with the maneuver brigade operations concept across all warfighting functions. This is critical to ensure the concept of sustainment tasks will not conflict with, hinder, or be hindered by brigade operations or control measures. Continuous coordination and communication between the SPO and brigade S-4 throughout the planning process are necessary to maintain awareness of changes in the brigade operations concept.

3-89. The BSB order uses the standard five-paragraph format, with paragraph 3 (Execution) providing the details of the concept of operations. This describes the way subordinate units cooperate to accomplish the sustainment mission and establishes the sequence of actions the BSB units will use to achieve the end state. It identifies the tasks to be executed (supply, distribution, AHS, maintenance, recovery), a time and location for execution, and the subordinate units responsible for each task.

3-90. The BSB SPO and S-3 remain alert for brigade task organization changes in order to make recommendations to the brigade commander on shifting logistics capability or deliveries from one FSC to another. This is especially critical in supporting the main effort.

3-91. During the planning process, the BSB SPO staff identifies sustainment capability gaps and communicates shortfalls to the DSB or sustainment brigade. Coordination between a sustainment brigade and a BSB may include addressing the need for field services, water purification, bulk water storage and distribution, general supply, transportation, and mortuary affairs support. The concept of operations also includes requirements to coordinate with the DSB, DSSB, or CSSB for supply replenishment. Ideally, it identifies when and where the DSSB is expected to deliver supplies. Additional order products supporting the concept of operations, such as operation overlays, execution matrices, movement control tables, and traffic control overlays, may be included in annex C as appendixes or tabs.

3-92. The BSB S-3 publishes an OPORD that tasks subordinate units to execute the concept of operations. Once execution begins, the BSB S-3 monitors and controls current operations. The SPO focuses on future operations extending 24-48 hours to ensure the BSB is postured to execute sustainment operations to maintain the brigade momentum.

3-93. The BSB SPO officer is the principal staff officer responsible for synchronizing BSB distribution operations for all units assigned or attached to the brigade. The BSB SPO is responsible for applying the BSB capabilities against the brigade's requirements. The brigade S-4 is the logistics planner for the brigade, and identifies requirements through daily LOGSTAT reports, running estimates, and mission analysis. The S-4 also compares LOGSTAT reports received from the division S-4 with the LOGSTAT reports from the subordinate units. The BSB normally has 24, 48, and 72-hour planning horizons. The SPO section is responsible for planning, monitoring, and reporting the on-hand water stockage levels. The SPO section also develops the concept of support and the distribution or logistics package plan.

3-94. The BSB SPO section is the key interface between supported units and the DSB. The SPO section is responsible for coordinating support requirements with the sustainment brigade SPO section. Requirements are determined in coordination with the brigade S-1, brigade S-4, and BSB S-3. The SPO coordinates with the BSB S-3 to produce orders for execution by all subordinate BSB units, including the FSC, during the performance of current operations and brigade support operations. These orders can include a synchronization matrix outlining the plan for execution. This enables the brigade S-4 and all subordinate BSB units to be aware of the brigade support plan.

3-95. The BSB SPO routinely conducts a brigade logistics synchronization meeting. Attendees may include the brigade S-4, FSC commanders, medical planners, BSB SPO section staff, and maneuver battalion S-4s as well as any supporting sustainment coordinating staff at echelons above brigade. Attendees consider calendars, unit battle rhythms, current orders, logistics reports, sustainment synchronization matrix, commander's guidance, and other pertinent information. Meeting products include warning orders, SPO guidance, and updated calendars, sync matrixes, and logistics posture.

BSB DISTRIBUTION COMPANY

3-96. The BSB distribution company's role is to provide water distribution to the brigade executing missions in each of its four strategic roles. It executes a combination of supply and transportation functions to accomplish supply replenishment to support defensive operations. The BSB distribution company plans, directs, and supervises supply distribution in support of a brigade to execute anticipatory replenishment in accordance with the support concept.

3-97. The distribution company commander receives the BSB OPORD and begins troop-leading procedures. The distribution company commander and staff use Army troop-leading procedures to develop a concept of operations to execute the distribution company's sustainment mission as described in the BSB order. The distribution company commander and staff conduct mission analysis to develop a thorough understanding of the BSB commander's intent, the brigade mission, and desired end state. The distribution company commander restates the BSB mission to include the intent, guidance, and desired end state for the assigned mission.

3-98. The distribution company order uses the standard five-paragraph format with paragraph 3 (Execution) providing the details of the concept of operations. This describes the manner in which subordinate units cooperate to accomplish the sustainment mission and establishes the sequence of actions the platoons will use to achieve the end state. It identifies the tasks to be executed, a time and location for execution, and the subordinate units responsible for each task.

3-99. During troop-leading procedures, the company executive officer identifies any sustainment capability gaps and shortfalls and coordinates with the BSB for mitigation. Coordination may include identifying the need for field services, bulk fuel storage and distribution, water purification, bulk water storage and distribution, general supply, transportation, and mortuary affairs support. The concept of operations also includes requirements to coordinate with the BSB for supply replenishment. Ideally, it identifies when and where the BSB is expected to deliver supplies. Additional order products supporting the concept of operations such as operation overlays, execution matrixes, movement control tables, and traffic control overlays may be included in annex C as appendixes or tabs.

3-100. The distribution company commander publishes the OPORD, which tasks subordinate units to execute the concept of operations. Once execution begins, the commander monitors and controls current operations. The distribution company commander and key leaders constantly conduct distribution management to integrate supplies with available transportation assets and control the movement of these according to the distribution plan.

FORWARD SUPPORT COMPANY

3-101. The role of the FSC is to provide direct support to a specific supported battalion. The brigade or BSB commander may either attach an FSC to the supported battalion or place the FSC under OPCON of the supported battalion for a limited duration. The FSC provides logistics support that is organized specifically to meet the supported commander's needs. The FSC commander receives technical logistics oversight and mentoring from the BSB commander and maintains a relationship with the BSB SPO. The BSB communicates the concept of support through the SPO to the FSC commander.

3-102. The FSC commander receives the BSB OPORD and begins troop-leading procedures. Aviation FSCs receive the aviation battalion OPORD and begin the operations process. The FSC commander and staff use Army troop-leading procedures to develop a concept of operations to execute the FSC's sustainment mission as described in the BSB order. The FSC commander and staff conduct mission analysis to develop a thorough understanding of the BSB commander's intent, the brigade mission, and desired end state. The FSC commander restates the BSB mission to include the intent, guidance, and desired end state for the assigned mission.

3-103. During the planning process, the company executive officer identifies any sustainment capability gaps and shortfalls and coordinates with the BSB for mitigation. Coordination may include the need for field services, bulk fuel storage and distribution, water purification, bulk water storage and distribution, general supply, transportation, and mortuary affairs support. The concept of operations also includes requirements to coordinate with the BSB for supply replenishment. Ideally, it identifies when and where the BSB is expected to deliver supplies. Additional order products supporting the concept of operations (such as operation overlays, execution matrices, movement control tables, and traffic control overlays) may be included in annex C as appendixes or tabs.

3-104. The FSC commander publishes the OPORD, which explains how the FSC will execute the concept of operations and tasks subordinate elements. Once execution begins, the commander monitors and controls current operations. The FSC commander and key leaders constantly conduct distribution management to integrate supplies with available transportation assets and control the movement of these according to the distribution plan.

WATER PLANNING TOOLS

3-105. Logistics planners use guidelines and planning factors to determine the quantities of water needed to support an operation. Logistics planning data includes a variety of information such as consumption rates, reference data, and planning factors. Planners at the strategic, operational, and tactical levels use Army logistics planning data and factors to estimate the amount and type of effort required for a given operation.

3-106. Units forecast requirements for each class of supply using logistics planning factors. A planning factor (rate, ratio, length of time) is a multiplier used to estimate the amount and type of effort involved in an operation. Population-based planning factors have three variables:

- The weight of the class of supply for a given period.
- The population supported during the same period.
- The estimated number of days for the operation or mission.

3-107. Historical data (if appropriate data is available) may lead to the most accurate forecasts. In the absence of historical data, liquid logistics planners use OPLOG Planner or the Quick Logistics Estimation Tool (QLET) to compute water requirements.

WATER PLANNING GUIDE

3-108. The Water Planning Guide is a comprehensive sustainment planning tool that identifies requirements, assesses capabilities, and identifies resources supporting military operations at all levels. This document is

used during liquid logistics operational planning. It includes a detailed breakdown of functional factors so that they may be tailored to fit specific circumstances.

3-109. This guide aims to align the process of water planning across a range of military operations while accounting for capacity, adaptability, and resilience for the management of water resources. Commanders at all levels are responsible for ensuring that water conservation and supply discipline are continuously exercised and enforced. Discrete military or civilian population sets, workloads, or specific equipment densities drive several water-consuming activities. Consumption for these activities cannot be easily reduced to per capita planning factors that can be applied against the military personnel population in a theater. Nevertheless, standard planning factors have been developed for some of these functions. See the Water Planning Guide for additional information on water planning tools and resources for water planners.

OPERATIONAL LOGISTICS PLANNER

3-110. Planners can determine stockage and resupply requirements for a theater using LOGSTAT, command guidance, unit SOPs, and OPLOG Planner.

3-111. OPLOG Planner is a stand-alone interactive tool that assists commanders and staffs in developing a sustainment estimate. The planner is updated annually with the HQDA G-4 approved logistics planning rates and the standard requirements codes. The rates and codes reflect the equipment and personnel found in the objective tables of organization and equipment designed by Training and Doctrine Command and maintained by the U.S. Army Force Management Support Agency. Sustainment planners answer a series of questions about mission, enemy, terrain, weather, troops, time available, civil considerations, and task organizations, to generate a supply estimate for each supply class.

3-112. OPLOG Planner is used in water planning to estimate the amount of water required for a potential operation. The estimate is based on factors such as unit size, OE, and duration of the operation. All reports are easily exportable in multiple formats for ease in staff planning, analysis, and chart making. Water planners can gain access to OPLOG Planner by contacting the CASCOM Planning Data Branch website located in the references of this publication.

QUICK LOGISTICS ESTIMATION TOOL

3-113. QLET is a lighter, quicker version of OPLOG Planner that provides requirements for one or multiple standard requirements codes for each class of supply. Although not as detailed as OPLOG Planner, users can select the standard requirements codes, joint phase, climate, and platform requirements, and the tool provides a logistics estimate. It calculates the total weight, short tons, gallons, pallets, and platforms required based on the standard requirements codes chosen.

3-114. The HQDA G-4 has given the United States Army Combined Arms Support Command Planning and Data Branch the responsibility for updating QLET periodically. Liquid logistics planners can access QLET by contacting the CASCOM Planning Data Branch website located in the references section of this publication.

FORCE MANAGEMENT SYSTEM WEBSITE

3-115. The U.S. Army Force Management Support Agency maintains the Force Management System Website (FMSWeb). The website address is in the glossary of this publication. Planners can use FMSWeb to determine capabilities. FMSWeb provides basis of issue, tables of organization and equipment, modification tables of organization and equipment, common tables of allowance, table of distribution and allowances, and joint tables of allowance.

3-116. The modification tables of organization and equipment are likely to be the most up to date for determining capabilities. Users can search for unit data by name, unit identification code, or standard requirements code.

PLANNING CONSIDERATIONS BY FOREIGN OR HOST NATIONS

3-117. Planners should not assume host-nation water is available, particularly in locations with extreme climates. Acquisition and cross-servicing agreements are the formal mechanisms that allow the U.S. DOD to acquire and provide logistics support, supplies, and services directly to and from eligible countries and

international organizations. Planners at strategic echelons identify and negotiate whether host-nation water will be made available in order to leverage pre-established agreements or establish contracts with local vendors. The theater commander may authorize contingency contracting if circumstances require consumption of host-nation supplied water for a protracted period. The TSC, ESC, or other senior sustainment headquarters will normally be tasked to establish contracts of this kind. Minimal water sources and poor water quality will limit any operation that depends on host-nation support. During the initial phase of an operation, host nation water (either processed or bottled) may be procured to meet the basic consumption needs of advance party elements of the deploying force. Preventive medical personnel must certify all water as potable before it is consumed, regardless of how it is packaged, produced, or procured.

3-118. The initial calculations for how much water the Army, Marine Corps, and other Service contingents will consume may not always be accurate. Water materiel managers must provide a force structure adequate to purify, store, and distribute the daily requirement for the force. Logistics planners should develop contingency plans with host nations for identifying and determining the availability of water resources for use by U.S. forces. Existing host-nation communication channels should be used to determine the ability of the host nation to assist in meeting the potable water requirements for a large ground force.

3-119. Field water quality standards have been developed by international agreements among the member nations of the North Atlantic Treaty Organization (NATO). Member nations have agreed to adopt minimum requirements for potability of drinking water to be issued to troops in combat zones or in any other emergencies. The two agreements that discuss water quality standards are NATO standardization agreement (STANAG) 2136 and STANAG 2629. As a member nation of NATO, the U.S. has agreed to accept and provide water meeting these standards when participating in multinational water support operations. DOD standards for water quality meet or exceed these STANAGs as well as the national standards for most developed nations in the world.

ENVIRONMENTAL AND CLIMATE PLANNING CONSIDERATIONS

3-120. Because water treatment involves the use of chemicals, care must be taken to limit any possible hazardous effects on the environment. Caring for the environment protects health, safety, and natural resources. Some states and nations view water treatment as an industrial process that results in industrial waste. For this reason, local laws may require approval before establishing a tactical water production site. Local laws may require a dig permit when drilling wells and constructing or improving a water production site. Whenever possible, all water treatment personnel should seek to understand local environmental laws and regulations before deployment. Local regulations may limit disposal, have implications for dispersion, or eliminate water sources from consideration. This will help facilitate water site development. The type or stage of an operation may limit a unit's ability to adhere to local laws and regulations. Logistics planners and water treatment specialists should understand the environmental effects of operating a water site. Logistics planners and water treatment specialists have a responsibility to adhere to the theater commander's policies that dictate health and environmental standards.

3-121. Extreme weather conditions cause increased wear on water treatment systems. Extreme hot and cold weather can prevent operation entirely (see individual system descriptions in appendix A for operating temperature range). Extreme hot weather environments can be arid with heavy dust, sand, wind, and extreme ultraviolet radiation. Water treatment systems in extreme conditions often require more frequent preventive and corrective maintenance. Lubrication is critical to prevent abrasion of parts from dust and sand. Electrical wire insulation can wear down from sand and grit. Protect wires with electrical tape and inspect routinely.

3-122. Water viscosity increases in extreme cold weather, and therefore moves more slowly through pumps. Disinfection chemicals require additional time to be effective in freezing temperatures. Water flow through treatment systems must be slowed to account for increased time for chemical reactions. For these reasons, production rates of water treatment systems will be reduced during cold weather operations. Extreme cold weather may cause parts to crack, especially if made of plastic. Electronic instruments may become less dependable and even fail. All systems components should be drained when not in use to prevent freezing. Water purification systems include LWPs, LWPSs, TWPSs, and ROWPUs. These systems require cold weather kits to operate during extreme cold weather conditions and may require a heating tent depending on temperature and mission. The LWP and the LWPS require an additional three-kilowatt generator for operation under freezing temperatures. Appendix B describes special considerations for water site

development. See TM 4-33.31 for additional information on maintenance considerations in an arctic environment.

3-123. The type of OE will significantly affect water consumption planning factors. Water and climate information determine the need for things such as early deployment of well drilling assets as well as water purification and distribution units. The four types of environments are tropical, arid, temperate, and arctic, and each present different planning considerations. The planning factor tables that follow account for each type of environment.

TROPICAL

3-124. Tropical areas of the world have an annual mean daily temperature of more than 80 degrees Fahrenheit. In tropical regions, water sources are expected to be abundant. Dense vegetation and lack of roads pose significant problems in exploiting water sources. Poor ground LOCs may inhibit water distribution by truck and place greater reliance on aerial resupply. Individual consumption will increase due to high temperatures and humidity. Cool water should be provided to encourage personnel to drink large quantities of water to prevent heat injuries.

ARID

3-125. Arid areas of the world have an annual daily temperature of more than 80 degrees Fahrenheit. In arid regions, available water sources are limited and widely dispersed. The lack of water sources will result in a large storage and distribution requirement. Potable water is used to meet non-potable water requirements when raw water is unavailable. Individual consumption will increase due to high temperatures. Cool water should be provided to encourage personnel to drink large quantities of water to prevent heat injuries.

3-126. Planners should assume no host-nation water is available in arid regions. Minimal water sources and poor water quality will limit any operation that depends on host-nation support. During the initial phase of a deployment, host-nation processed or bottled water may be used if certified as potable by PM personnel. Use of host-nation municipal or private fixed facilities is dependent on the above stipulations and local policies as directed by the theater commander.

3-127. Early deployment of water units should be expected in arid regions. Water units may need to reconnoiter sources of raw water, bore new wells, and establish central water points. These actions may be necessary because of the increased consumption requirements, limited availability of aircraft for aerial resupply, and the need for centralized production. Centralized production should be near the shore or offshore, and tank trucks for distribution will be required early on. The water units used in early deployment need to operate high-capacity water treatment systems, including water supply companies and detachments that operate WSDSs.

TEMPERATE

3-128. Temperate areas of the world have an annual mean daily temperature ranging from 32 to 80 degrees Fahrenheit. In temperate regions, water sources are normally abundant. Sources convenient for water supply operations should be easy to locate and develop. Drinking water typically does not need to be cooled to encourage drinking.

ARCTIC

3-129. Arctic areas of the world have an annual mean daily temperature of less than 32 degrees Fahrenheit, with the lowest extreme temperatures in the winter being between -65 and -50 degrees Fahrenheit. This will significantly affect the operation of current water systems, as they are limited to operation in weather conditions that are -25 degrees and above. Individual consumption should be greater than in temperate regions to prevent dehydration. Personnel may not recognize the elevated rate of dehydration in cold climates, so frequent reminders may be necessary.

3-130. In arctic regions, engineer support or use of a power auger will be required to drill through frozen ground and the surface layer of frozen water. Planners should consider bringing extra hoses and pumps, as the distance to these sources might exceed the equipment capabilities. Dominant water sources are unfrozen water beneath frozen rivers and lakes or civilian and military-constructed wells. Location and exploitation of water sources convenient for water supply operations may be difficult. The dispersion of suitable water

sources from supported units may cause a distribution challenge for transportation planners. Water treatment, storage, and distribution systems may require augmentation with additional equipment to prevent freezing and mitigate regional transportation challenges. Appendix C of this publication contains additional arctic region planning and water support operations considerations.

ARMY WATER PLANNING PROCESS

3-131. The total quantity of potable and non-potable water required is linked to the number of personnel consuming it, the level of physical activity required, and environmental factors like temperature. Historical data is used to create water planning factor tables and charts to calculate how much water one person consumes daily. This data is presented in units of gallons of water per person per day. The water planning factor tables were developed for general planning and are applicable at all echelons. Planners modify or adjust these standard planning factors based on the latest logistics preparation of the battlefield assessments or other unique conditions associated with a given operation or AO.

3-132. Universal unit-level water requirements apply to all units regardless of mission profile. They include water for drinking, personal hygiene, and individual meal preparation (meal, ready to eat [MRE] heaters and beverage mixes). Universal unit-level requirements represent minimum water consumption rates critical to maintaining force mission effectiveness during the beginning phase of the operation, typically characterized by high mobility and heavily contested environments.

3-133. Sustaining unit levels represent the sustaining amount of water required to maintain a military force's mission effectiveness after initial operations have concluded. Sustaining unit level water requirements include universal unit levels and account for the water requirements of functional unit-level missions. These requirements include central hygiene, field feeding, medical operations, mortuary affairs, CBRN, engineer operations, vehicle or maintenance operations, and other related factors supporting military operations other than war.

3-134. The Army's water planning factor information and tables are located in the Water Planning Guide on the U.S. Army Quartermaster School Petroleum and Water Department website. Standard water support planning factors for the Marine Corps are presented in table 3-1 on page 49.

MARINE CORPS WATER SUPPORT PLANNING

3-135. Water support planning within the MAGTF involves collaboration between the supported Marine Corps Service component commander, the MAGTF headquarters' staff logisticians and engineers, and subordinate elements of the MAGTF that either require bulk potable water support or provide bulk potable water support. Consumption requirements for the MAGTF are developed using combat planning factors for the size and composition of the force, the duration of the operation, combat intensity, unique environmental conditions (cold, mountainous, jungle, desert, or urban), and other mission variables. The composition of each MAGTF is tailored to accomplish the assigned mission. Similar consideration is given to calculate the quantity and diversity of accompanying supplies that deploy with the MAGTF. To maximize available amphibious or strategic sealift and preserve combat power, MAGTFs rely upon detailed intelligence preparation of the battlespace to identify local resources that can be used to conduct operations ashore. Finding and evaluating the suitability of existing sources of raw or potable water is always included during intelligence preparation of the battlespace.

3-136. Planners throughout the MAGTF use the MCPP to conduct planning before deployment. MCPP incorporates intelligence preparation of the battlespace, analysis of mission variables, determination of water and other logistics commodity requirements, and staff estimates to determine feasibility of support. During intelligence preparation of the battlespace, planners evaluate forecasted consumption rates against available water resources and the MAGTF's bulk water purification, storage, and distribution capability. MCPP assists the MAGTF commander in developing an OPORD for execution. The OPORD will finalize details pertaining to force composition (task-organization of personnel and equipment), deployment phasing, concept of operations, and concept of logistics support.

3-137. Depending on the mode of transportation used to deploy to the theater of operations, the MAGTF will be able to leverage the water production capability of amphibious warships or withdraw from bulk water stocks that are located aboard host-maritime pre-positioning program ships. Maritime pre-positioning

program vessels use the hoses and pumps of the amphibious bulk liquid transfer system to send bulk water ashore. The amphibious bulk liquid transfer system consists of 10,000 feet of buoyant four-inch hose and pumps which can deliver bulk water to landing force water storage locations ashore. This method of distributing bulk water from maritime pre-positioned stocks can be performed while the host vessel is conducting an in-stream or pier-side offload. Accessibility to maritime resources is critical to meet the needs of units employed ashore (especially when the MAGTF's full water purification, storage and distribution capability has not been moved or established ashore).

3-138. Planners in each water support organization will develop detailed plans for task-organization and coordinate the employment of engineer assets (such as water support equipment) using a battle rhythm that supports rapid decision-making and the MAGTF's mission. The water support technicians within each unit are specifically trained to conduct water reconnaissance, water surveys, and water quality analysis. Water support technicians are also capable of performing a variety of other water support activities including establishment and development of water treatment sites to purify water within a CBRN environment, performance of preventive and corrective maintenance on all Marine Corps water support equipment, and tactical employment of water storage and distribution equipment. Marine Corps water support technicians are essentially self-sufficient as equipment operators and maintainers.

3-139. Table 3-1 provides basic Marine Corps water consumption planning factors for some common functions under combat conditions. The information in the table can be used to develop a water support plan for field training exercises. Marines will use the planning factor data contained in the Army Water Planning Guide to estimate water needed to support more enduring functions at contingency locations (such as vehicle or aircraft maintenance, CBRN decontamination, construction, mortuary affairs, dining facilities, or customs and agriculture inspections). The environmental conditions are divided into two consumption categories, sustaining and minimum. These categories are discussed in the two succeeding paragraphs. Factors in the table are in terms of gallons of water per person, per day. The total gallons of water required for each day is calculated by multiplying the appropriate unit type, environmental factor, and consumption category by the number of personnel supported. Figures in the table reflect the combat planning factor of a daily shower and 8.0 pounds of laundry per week for all personnel.

3-140. The following examples are provided to illustrate how the data in Table 3-1 is used to calculate water required for tactical showers, laundry, and to support personnel participating in a desert field training exercise:

- **Example 1**. Determine the quantity of water required to provide a tactical shower daily for 50 personnel. Multiply the number of personnel by the tactical shower rate per person.

  50 personnel x 3 gallons/person = 150 gallons/day

- **Example 2**. Determine the quantity of water required to wash clothing weekly for 50 personnel. Multiply the number of personnel by the quantity of water required to wash one bag of laundry.

  50 personnel x 12.5 gallons/laundry bag = 625 gallons/week

- **Example 3**. Determine the total quantity of water needed to support a 70-person unit participating in a 21-day long field training exercise at Twenty-nine Palms, CA. The unit will eat MREs and will use the base's permanent facilities for showers, laundry, medical, and dental services. Use the steps below:
  - Step 1 – Combine the UULs rate for drinking, personal hygiene, and field feeding to determine the daily rate.

    2.1 + 1.73 + .45 = 4.28 gallons/person
  - Step 2 – Multiply the daily rate by the number of personnel to find the daily water demand.

    4.28 x 70 = 299.6 gallons/day
  - Step 3 – Multiply the daily water demand by the number of days to determine the total quantity of water required.

    299.6 x 21 = 6291.6 gallons

Table 3-1. Basic Marine Corps water consumption planning factors

Function		*Hot Arid (dry)*	*Hot Tropical (humid)*	*Temperate (mild)*	*Cold*
Drinking* (gals/person/day)	Workload + independent factors	2.1	2.1	2.1	1.93
Personal Hygiene* (gals/person/day)	Oral hygiene, shaving, sponge bath	1.73	1.73	1.73	1.73
Field Feeding (gals/person/day)	3 MREs/day*	.45	.45	.45	.79[1]
	2 UGRs + 1 MRE**	.79	.79	.79	.79
Medical Treatment (gals/patient/day)	Role 1 (BAS)*	3.7	3.7	3.7	3.7
	Role 2 (STP, FRSS)*	3.7	3.7	3.7	3.7
	Role 3 (EMF)**[2]	65.0	65.0	65.0	65.0
Centralized Hygiene[3] – Field Showers** (gals/person/day)	2-minute tactical shower using showerhead with flowrate of 1.5 gpm	3.0	3.0	3.0	3.0
Centralized Hygiene[3] - Laundry** (gals/person/load)	CBL washes 12 bags of clothing per load cycle (6 bags per washer)	See [4]	See [4]	See [4]	See [4]
	TOTAL:	11.68[5]	11.68[5]	11.68[5]	11.85[6]
		14.6[7]	14.6[7]	14.6[7]	14.85[8]
		80.02[9]	80.02[9]	80.02[9]	79.85[10]

BAS battalion/squadron aid station
CBL containerized batch laundry
EMF expeditionary medical facility
FRSS forward resuscitative surgery system
gals gallons
gpm gallons per minute
MRE meal, ready to eat
STP shock trauma platoon
UGR unitized group ration

NOTES:

* *Universal Unit Levels* (UULs) are water requirements that apply to all units regardless of mission profile. This rate is used to estimate individual consumption during the first days of combat (e.g., D-day to D+7)

** *Sustaining Unit Levels* (SULs) represent the amount of water required to maintain unit mission effectiveness after initial combat operations have concluded. Rate includes UULs rate for individual consumption categories.

1 rate for daily consumption of 3 meal, cold weather (MCWs) rations

2 per NAVMED P5010, chapter 9

3 per TB MED 577/NAVMED P5010-10, non-potable water can be used for shower and laundry

4 Laundry occurs weekly. Initial load of laundry requires 200 gallons of water to charge the pair of washers. Subsequent loads require 150 gallons for the pair of washers due to the CBL's water reuse feature. Individual bag rate is determined by dividing 150 gallons by 12 bags per wash load (assumes use of both washing machines). The result after division equals 12.5 gallons of water per individual laundry bag.

5 includes drinking, personal hygiene, 3 MREs, Role 1, Role 2

6 includes drinking, personal hygiene, 3 MCWs, Role 1, Role 2

7 includes drinking, personal hygiene, 3 MREs, Role 1, Role 2, field showers

8 includes drinking, personal hygiene, 3 MCWs, Role 1, Role 2, field showers

9 includes drinking, personal hygiene, 2 UGR + 1 MRE, Role 1, Role 2, Role 3, field showers

WATER RECONNAISSANCE

3-141. Detailed planning for water support to operations involves analyzing mission variables and forecasting the consumption demand for potable water. Once these two actions have been completed, a reconnaissance should be conducted to assess the viability of establishing a water site and available resources to meet the need of the supported forces. A task-organized team consisting of a water treatment specialist, PM, engineer, and CBRN personnel is best suited to perform the in-person reconnaissance and to provide expertise in determining the viability of a water site. The water reconnaissance team must have a clear understanding of the operation plan, threat situation, OE, and concept of support before conducting a reconnaissance. The water reconnaissance team validates primary and alternate water sites during the reconnaissance.

WATER RECONNAISSANCE PLANNING

3-142. Proper planning is essential to water site selection and should be foremost in the minds of the reconnaissance personnel. The planning for a water site, whether it be for treatment, storage, or distribution, begins with mission guidance from the tactical commander. Whenever possible, include the water site within logistics areas (such as a brigade support area) or base camp. At the very least, laundry, bath, and personnel decontamination units should be near water supply point operations for mutual support. To enhance resupply operations, collocate field rations and water points. The water reconnaissance team coordinates with unit intelligence personnel for information, products, and assessments concerning air and ground surveillance, geospatial intelligence, terrain analysis, and technical intelligence.

RECONNAISSANCE OBJECTIVES

3-143. Water supply reconnaissance is concerned with the quantity and quality of water available, the extent to which the source has been developed, and the potential for establishment of a water site. The team must consider placement of water storage and distribution equipment within the water site. A satisfactory water source is one of sufficient quantity to meet the needs of the force it is supporting, of such quality that it can be purified to military water standards, and sustainable on a long-term basis. An on-the-ground reconnaissance team assesses the following areas related to water source and water site development:

- Type of water source.
- Amount of water available, including rate of replenishment.
- Quality of raw water.
- Survey two miles upstream for possible contamination.
- Route of water from original source to proposed extraction point.
- Feasibility of impounding water by construction of dams, embankments, or infiltration trenches (for springs, streams, and rivers).
- Land available (space).
- Site layout requirements to ensure proper land use (consider treatment, storage, and distribution system requirements).
- Suitability of terrain.
  - Avoid sloped ground.
  - Avoid low areas where vapors can collect.
  - Seek firm ground, free of surface rocks and large stones.
  - Soil conditions for proper drainage.
- Road networks.
- Hazards (such as unexploded ordnance).
- Existing facilities available for use.
- Bivouac for personnel.
- Security, to include cover and concealment.

RECONNAISSANCE EQUIPMENT

3-144. During a water site reconnaissance, the water treatment specialists will take the water quality analysis set: purification equipped with the M272 Chemical Agents Water Testing Kit and the M329 Joint Chemical, Biological, Radiological Agent Water Monitor. During a water reconnaissance, water treatment specialists will analyze the raw water for turbidity, TDS, potential hydrogen (pH), and temperature. The M272 Chemical Agents Water Testing Kit is for visual tests using color comparison to determine hazardous levels of lewisite, nerve, cyanide, and mustard agents. The M329 Joint Chemical, Biological, Radiological Agent Water Monitor detects and presumptively identifies biological agents and detects and quantifies the presence of radiological contamination in water. It provides field capability to detect two biological agents per handheld assay and gross alpha and beta radiological contamination.

RECONNAISSANCE OPERATIONS

3-145. Before conducting ground reconnaissance, the reconnaissance team should study available maps and imagery. Although military maps may remain useful for military operations, they may be incomplete or outdated for identifying appropriate water sources. Satellite imagery is updated frequently, making these good sources of accurate information for planning. An air reconnaissance should precede a ground

reconnaissance when time and equipment permit. Air reconnaissance is a rapid means of securing information about water sources and potential storage and distribution sites over a large area. Air reconnaissance is limited by adverse weather and security considerations.

3-146. Ground reconnaissance is the best way of obtaining accurate information to select a water site or storage and distribution area. First-hand knowledge of the terrain is critical to planning. Water treatment specialists are responsible for conducting a water quantity and quality analysis on site.

DD FORM 1712 (*WATER RECONNAISSANCE REPORT*)

3-147. DD Form 1712 is used to record information about the proposed water site during the site survey. Data entered on the DD Form 1712 must be accurate and detailed to ensure the best sites are selected.

Section 1

3-148. Section 1 includes the quality and quantity of a water source. This information facilitates the selection of the most suitable water source for operations based on the quality and amount of water available at a source. The type of source will influence site selection by indicating contamination potential and security requirements for operation at the source. TDS, temperature, turbidity, and pH will affect water production and chemical and material requirements for operation on the source. Quantity indicates the potential duration of operations on the site, as well as the production capability.

Section 2

3-149. The site conditions section indicates the immediate condition of the operational site, as well as projections for suitability and additional improvements (completed organically or with engineer support) that are required or recommended:

- Security: Lists the general defensibility of the site and should contain a force protection assessment (to include cover and concealment, avenues of approach, egress options, and a response time estimate for support or quick reaction force if available). Additionally, the security section should include an assessment for protecting the water source.
- Drainage-Soil Type: Lists the suitability of a site for continuous operation in regards to mud or standing water generation. This section is for recon personnel to indicate if the site has adequate drainage because of topography or absorption potential of the soil, as well as to identify what site improvements would be required to create suitability.
- Terrain: Lists the general topography of the area (which ties closely to the security and drainage sections) as well as giving an indication of accessibility for customers or resupply. This section would also list any recommendations for water source development or road network improvements.
- Bivouac: Lists the life support potential for the area, both in potential capacity and special requirements needed to sustain adequate living conditions for personnel operating the site. Temperature and wildlife concerns and the potential improvements required to mitigate them would be listed here in addition to any associated risks with the drainage (soil type or terrain).
- Distance to Consumers: If known, this section allows planners at the staff and operator level to determine logistical requirements associated with operating on the projected site and is an important discriminating factor when multiple site locations are available.

SKETCH OF AREA

3-150. This sketch is used to create an overhead view of the operational site, including road networks and traffic circulation. The sketch should include the proposed site layout with all equipment and safety and security measures in place and indicate and distances between key areas. A scale must be included in order for planners to project additional needs for the operational area and determine suitability. If equipment configuration or utilization is unknown, the potential operational area must be accurately measured so that when equipment is designated, planners can determine if the site is adequate. Figure 3-2 on page 48 is an example of a notional water site field layout sketch.

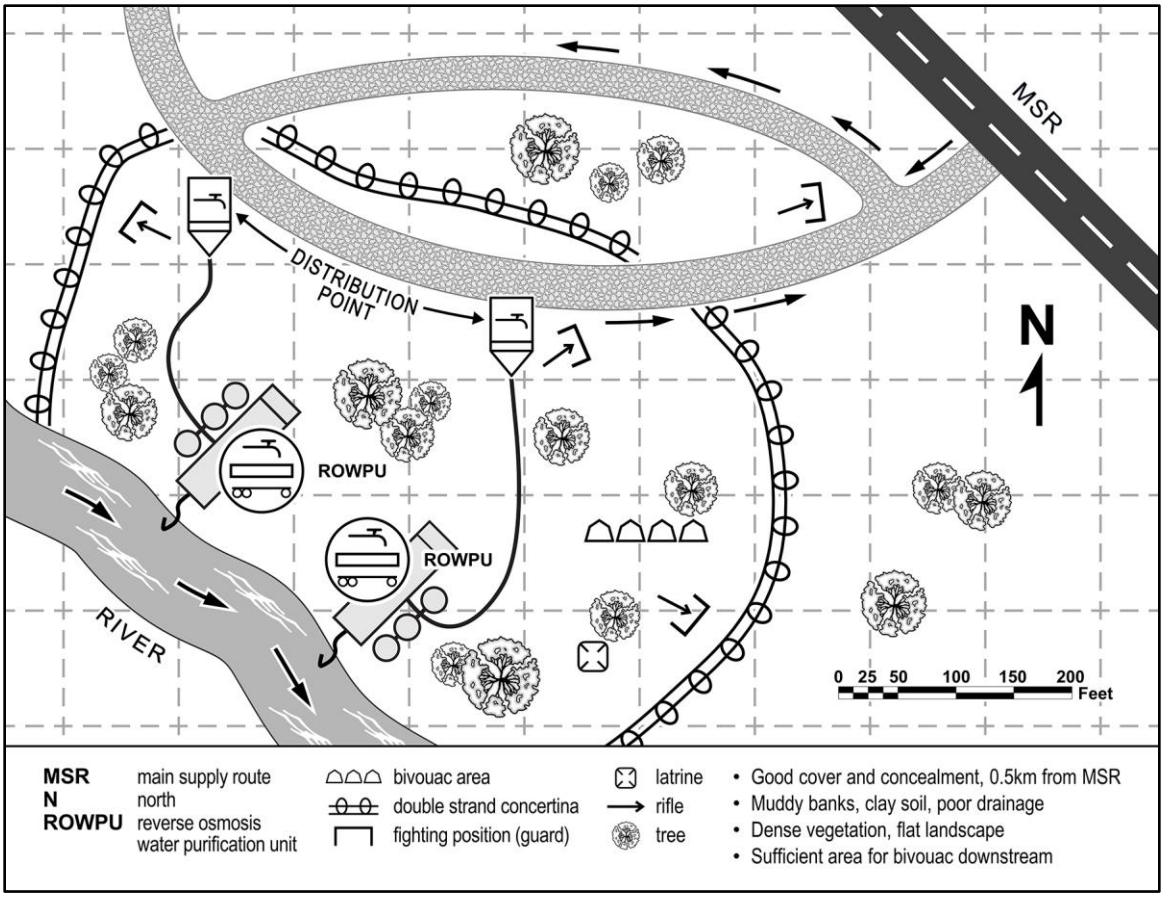

Figure 3-2. Notional sketch of water site near main supply route

COASTAL RECONNAISSANCE OPERATIONS

3-151. Conducting water treatment operations on a coastline has its own challenges. Avoid problems associated with surf turbulence and storm surge when possible. Plan to locate water treatment systems on sheltered bays, harbors, lagoons, or inlets instead of coastlines. When considering coastal operations, the following generalizations can be made:

- Every coast is different and unique and can vary to extremes in very short distances.
- Coastal terrain can include a wide variety of soils ranging from soft sand or mud, to coral, to volcanic lava and rock.
- Tidal fluctuations can vary as much as 200 feet or more on flat coastal shelves.
- Shoreline bays, harbors, estuaries, lagoons, and inlets are affected by the rise and fall of the tides.

3-152. When planning a reconnaissance for coastal areas, ensure that imagery, nautical charts, and tide tables of the area are available. Coastal maps represent the terrain at the shoreline above and below the waterline. A steep drop-off on the shore may indicate the tide does not recede that much at low tide, while a very flat coastal shelf may indicate that the tide will ebb great distances. Tidal charts include the predicted times and heights of the tide for each day. The time between successive high tides averages 12 hours 25 minutes; thus, high and low tide will occur twice every 24 hours 50 minutes, which is the length of the lunar day. During planning, the water reconnaissance team must identify areas where landing craft will come ashore so water support equipment is not emplaced where it impedes ship-to-shore operations.

3-153. When considering the area for potential locations to position water supply equipment, the following information should be gathered:

- Determine the distance the high tide will recede by observing the potential site at high and low tide. The height of the high tide can be determined by looking for the distinct cut of the debris on shore that the high tide leaves behind.
- Determine if the water supply equipment can be safely positioned and operated on the shore.
- Determine the impact it will have on water treatment operations.
- Talk to the local population about tide fluctuations and storm surge. (The locals know the history and characteristics of the coastal area).
- Ensure that potential sites are not part of environmentally sensitive ecosystems such as protected coastal areas and wetlands.
- Ensure that the site is accessible to all sizes of vehicles that will be entering the site.

Note. Vehicles and trailers will bog down quickly in loose sand, especially the heavier ROWPUs, TWPS, and HIPPOs. Material such as wood planking, crushed rock, and steel or fiberglass matting may need to be emplaced to provide an expedient road for vehicles to travel.

OPERATIONAL PUBLIC HEALTH SUPPORT

3-154. During the water reconnaissance, PM personnel perform surveys and water testing according to TB MED 577/NAVMED P-5010-10/AFMAN 48-138_IP. They also inspect water sites using the Defense Occupational Environment Health Readiness System *Natural Water Source Reconnaissance Survey* or DD Form 1712. PM personnel use the testing results and survey findings to characterize raw water sources in terms of treatability and to establish a basis of comparison for post-treatment water test results. Operational public health reconnaissance considerations are listed in table 3-2.

Table 3-2. Raw water source reconnaissance considerations

Parameter	*Considerations*
Water quantity	Is the source permanent or intermittent depending on season, temperature, or other factors (for example, human controls such as dams)? The greater the source flow and volume, the lesser the impact from added toxic substances (intentional or accidental).
Proximity of potential pollution sources	Landfills, agricultural and livestock wastes, industrial discharges, petroleum refineries, distribution or storage systems, domestic sewage discharges.
Visible evidence of contamination	Dead fish or vegetation, excessive algae growth, oil slicks or sludge, or strange-colored soil or surface residues.
Potential for contamination from accidents or hostile action	Upstream industrial facilities with significant quantities of toxic industrial materials; toxic industrial materials transportation routes in upstream watershed area; upstream area controlled by hostile forces.
Information from local populations	Smells, tastes, health effects, or endemic water-borne disease.
Reference TB MED 577/NAVMED P-5010-10/AFMAN 48-138_IP	

3-155. If PM personnel are not present during the water site reconnaissance, water treatment specialists will collect raw water samples to be submitted after the reconnaissance is completed. Samples will be submitted to supporting PM personnel.

ENGINEER SUPPORT

3-156. Engineer personnel provide expertise in terrain and hydraulic analysis, ground survey teams, and well drilling teams. Well drilling teams are located in the U.S. Army (12N Horizontal Construction Engineer), U.S. Navy (SEABEES), and U.S. Air Force (3E5X1 US Air Force Engineering). Requests for these teams are submitted through engineer planners at the division, corps, or MAGTF level. During the water reconnaissance, work with engineer personnel to determine if site improvements such as leveling the area, improving drainage, or building roads are possible.

3-157. Engineer personnel consider the work required to make the site useable for a water operation and the work needed to improve the site's efficiency after operations have been established. They will use DD Form 3015 (*Engineer Reconnaissance Report*) to record work estimate data. The report will provide information on the description of work, work hours required, type of equipment and hours required, and the type of materials and quantity required. A copy of this form should accompany the DD Form 1712. When available, a team consisting of civil engineer personnel can perform a detailed technical assessment of civilian infrastructure, including water or sewage treatment facilities. Engineers collect detailed technical information on the facilities, to include operational status and damage assessments.

WATER SITE SELECTION

3-158. Upon completion of water reconnaissance operations, the water reconnaissance team meets with logistics and operational planners to select the final location for the water site. In some circumstances, multiple reconnaissance teams are sent out to survey primary and alternate water site options. Water reconnaissance reports are compared against logistics and operational considerations when determining the final water site location. All water site assessment areas outlined above will be considered in determining the viability of a water site.

Chapter 4

Distribution Management and Materiel Management Process

The distribution integration process is composed of materiel management functions, transportation functions, and distribution functions. The process was created to describe all supply operations in unified terms. This chapter has tailored some of the general definitions to apply specifically to water support. Each Army sustainment echelon is described in terms of which functions are being executed and who is responsible for doing so.

4-1. Distribution management is a process that includes materiel management and transportation management functions. It provides a consistent process whereby materiel managers can know the things they need to do and the people they need to coordinate with to carry out water support operations effectively.

4-2. For water materiel managers, the process begins with planning for requirements and ends when the water is issued to the supported unit. Water materiel managers determine and validate water requirements by quantity and priority for distribution, obtain the water, and coordinate its distribution according to command priorities.

4-3. Transportation managers allocate specific modes of transport for bulk water and other commodities by quantity and priority to coordinate distribution and routing to meet command priorities. Distribution managers use the information provided by the materiel management component to coordinate transportation by commodity, quantity, priority, and recommended mode.

MATERIEL MANAGEMENT FUNCTIONS

4-4. Materiel management is the continuous situational understanding, planning, and execution of supply and maintenance capabilities to anticipate, synchronize, and direct the distribution of all classes of supply to maximize combat power and enable freedom of action in accordance with the supported commander's priorities. Sustainment planners, commanders, Soldiers, and Marines act as materiel managers when acting in roles that execute materiel management functions.

4-5. Materiel management addresses all internal and external logistical processes, information, and functions necessary to satisfy an operational supply requirement. The primary objective for materiel management is to provide effective and efficient supply support to meet operational requirements. Effective materiel management enables the commander greater situational understanding, informed decision making, and enhanced control and flexibility. These functions may be executed entirely or partly based on operational and mission variables:

- Supply planning forecasts and establishes the water stockage levels at each support echelon to meet mission requirements. It is a translation of an operating force's composition and consumption (based on climate and mission) into specific DOS requirements. Planning ensures that adequate quantities, types of water, and transportation assets are available.
- Requirements determination is the understanding and determination of daily water requirements to support an operating force. It aids commodity managers in defining priorities of support. It is based upon requirements communicated from operating forces and forecasted by sustainment organizations supporting these forces.
- Requirements validation is critical to avoid excess DOS and to avoid misuse of logistics, transportation, and purification assets. Water managers validate and prioritize available logistics assets against an established or forecasted requirement. It ensures that no requests for logistics support are passed to a higher headquarters until it is determined that on-hand assets are insufficient to meet the requirement. Requirements validation also includes establishing controlled rates of consumption, if necessary, such as limiting daily showers and laundry or other water use.
- Procurement is the producing, purchasing, or obtaining of water by any means to meet operational requirements. It includes the requisition process, contracting, and local purchase. Bulk potable water is procured as the product of the water purification process.

- Funds management includes contracting officers with warrant authority and finance officers who manage the obligation of funds in support of supply operations.
- Warehousing is the organization, sorting, and safeguarding of materiel. Warehousing includes warehouse management, receiving, storing, issuing, securing, inventory management, and accounting for materiel. Warehousing does not imply the use of fixed facilities. Tanks, bags, containers, and open areas also serve as warehouses.
- Stock control involves maintaining proper location and identification of materiel. Materiel managers need correct identification and location of materiel stored in warehouses to ensure the proper item of supply is issued to meet requirements. Unidentified or improperly cataloged items result in excess items being ordered by materiel managers.
- Supply provides all items necessary to equip, maintain, and operate a military command.
- Maintenance includes all actions necessary for retaining an item in, or restoring it to, a specified condition to support operations.
- Asset visibility includes material managers with the capability to determine location, movement, status, and identity of assets by class of supply, nomenclature, and unit. This enables improved decision making on sources of support and prioritization.
- Vertical and horizontal reporting of asset status is a critical component of asset visibility, requirements determination, and requirements validation. Asset reporting occurs at all echelons in accordance with the frequency and by commodities determined by the command.
- *Retrograde of materiel* is an Army logistics function of returning materiel from the owning or using unit back through the distribution system to the source of supply, directed ship to location, or point of disposal (ATP 4-93).
- Disposal is the systematic removal of materiel that is uneconomically repairable or obsolete. It is accomplished through the process of transferring, donating, selling, abandoning, or destroying materiel. It is normally directed through program management channels, but may also be a command decision if the OE dictates.

DISTRIBUTION MANAGEMENT FUNCTIONS

4-6. Distribution management must be executed across multiple echelons to be effective. Echelons from the TSC down to the platoon conduct distribution management, and each is responsible for understanding support requirements.

4-7. Distribution management synchronizes and optimizes transportation, its networks, and materiel management with the warfighting functions to move personnel and materiel from origins to the point of need in accordance with the supported commander's priorities:

- Distribution integrates the logistics functions of transportation and supply. It is dependent on materiel management and movement control. It is the operational process of synchronizing all elements of the logistics system to deliver the "right things" to the "right place" at the "right time" to ensure that the supported commander's priorities are met.
- Redistribution reallocates excess materiel to other locations in theater using all transportation assets available. Managers use excess materiel in theater to fill shortages and meet operational requirements.
- Prioritization ensures water is distributed, organized, and queued in order of priority as the command determines. Priority is expressed as both commodity and unit priority.
- Synchronization ensures distribution is synchronized with transportation operation cycles to ensure that modes with sufficient capacity are available when commodities are positioned for movement. It also synchronizes distribution with operational tasks, phases, and objectives.
- Transportation feasibility determines if the capability exists to move water from the point of origin to the final destination within the time required. If transportation is not feasible, this fact is reported from the DIB within the DMC or SPO to the materiel management branch.
- Mitigation of shortfalls links material management to transportation in terms of commodity, quantity, and priority. It ensures that adequate transportation assets are identified and obtained against the requirement deficiency.
- Visibility provides water planners with visibility of water that is queued, prioritized, and has transportation allocated for movement.

TRANSPORTATION MANAGEMENT FUNCTIONS

4-8. Transportation is a logistics function that includes movement control and associated activities. Transportation incorporates military, commercial, and multinational motor, rail, air, and water mode assets in the movement of units, personnel, equipment, and supplies in support of the concept of operations. Transportation management functions are carried out to move water from the point of production or purchase to the supported units. Water does not move efficiently without transportation management. Transportation management functions include:

- In-transit visibility refers to the capability to track identity, status, and location of DOD units, non-unit cargo (excluding bulk POL) and passengers, patients, and personal property from origin to consignee or destination. For additional information, see JP 3-36.
- Movement of forces contributes to the building of combat power and enables the maneuver commander to shift forces quickly and efficiently across the AO.
- Intermodal operations use multiple modes (airlift, sealift, ground transport) and conveyances (truck, barge, pallets, containers) to move troops, water, and equipment through expeditionary entry points and the network of specialized transportation nodes, to sustain land forces.
- Mode operation is the execution of movements using various conveyances (truck, lighterage, rail car, and aircraft) to transport cargo.
- Movement control is the dual process of committing allocated transportation assets and regulating movements according to command priorities to synchronize distribution flow over LOCs to sustain land forces.
- Allocation involves the distribution of limited forces and resources for employment among competing requirements.
- Coordination includes interfacing with organizations that participate directly or indirectly with the movement of personnel supplies and forces supporting deployment, redeployment, and distribution operations. Coordination extends to joint and multinational forces, the host nation, contractors, and non-government agencies.
- Routing is the process of scheduling and directing movements along the LOC to prevent overuse and congestion.

DISTRIBUTION MANAGEMENT PROCESS OVERVIEW FOR WATER

4-9. It is important to understand that functions are carried out continuously, through multiple iterations, and often occur simultaneously within the Army's distribution management process. For example, new requirements must be determined at regular intervals depending on changes in the mission variables (such as numbers of troops, climate or season changes, OPTEMPO, storage capacity, priorities for support, operational readiness rates for distribution assets, and accessibility of LOCs. A Marine Corps analog for this process is presented in MCTP 3-40H.

REQUIREMENTS DETERMINATION

4-10. Logistic estimates for water consumption are calculated before deployment and are constantly refined. The calculation is based on many considerations, including combat intensity, location, population density, and duration of operation. Determining and understanding a supply requirement to support an operating force aids planners in defining priorities of support. It is based upon requirements communicated from operating forces and is forecasted by sustainment organizations supporting these forces. LOGSTAT reporting and live consumption rates are important sources of information and allow planners to make assessments. The result of requirements determination is to have an accurate statement of how much water is needed.

4-11. Consumption rate is the average quantity of an item consumed or expended during a given time interval. For liquids, consumption rate is usually expressed in gallons per person per day. Water consumption requirements are the foundation for planning effective water distribution and establishing an effective distribution network to support the end user in theater. While conducting operations in theater, all units estimate water requirements and the necessary delivery frequency based on those estimates to ensure the supported unit has a continuous supply.

4-12. Accurate water consumption requirements enable SPO staffs to develop realistic plans in support of operational forces. At theater level, water consumption estimates are the basis for allocating supply stockage levels throughout the theater. Determining requirements allows planners to synchronize resupply and determine factors such as the amount of assets required to support the mission. At echelons above brigade level, water consumption requirements are used to establish priorities for distribution. At lower echelons, water consumption requirements are the basis for near-term or daily resupply.

4-13. Water materiel managers obtain and employ the best consumption estimates available. At the company level, the executive officer or company gunnery sergeants are normally responsible for this task. At battalion-level and above, the G-4 and S-4 are responsible for compiling and forwarding this information. Some resources used to generate water consumption estimates are historical data, OPLOG Planner, and Potable Water Planning Guide.

REQUIREMENTS VALIDATION

4-14. Units pass forecasted requirements through S-4 channels to materiel managers in the SPO, who manage distribution in coordination with distribution integration and supply elements. Water materiel managers provide allocations based on priorities provided by operations planners. The approved allocations are provided to the movement control managers.

4-15. The SPO staff at each echelon compares the collected water requirements to the capabilities of that echelon's supporting units. Planners validate and prioritize available water against an established or forecasted requirement. Requirements validation helps ensure requests are realistic and supportable. If the staff determines on-hand assets are insufficient to meet the requirement, it passes a request to its higher headquarters.

4-16. Requirements validation is critical to avoid excess materiel and avoid misuse of logistics transportation and maintenance assets. Requirements validation also includes establishing controlled rates of supply, if necessary. The majority of requirements validation is done automatically with information systems. However, manually validating water requirements may be necessary, especially during sustained periods of active combat when operations are being conducted under hostile threat conditions.

RESUPPLY

4-17. The resupply function is carried out to make new potable water available. Bulk water purification is the clearest example of resupply within water support operations. Purchasing and producing bottled water are also examples of the resupply function. If a requirement can be met with water stocks already within the Army inventory, then it is requisitioned. If the Army stock is not capable of fulfilling the requirement, then the resupply process is initiated. Bulk water purification is the most efficient resupply method during large scale combat; it is the most cost-effective and creates less stress on the distribution network.

STORAGE

4-18. Supply units normally execute bulk water storage in tanks or bladders. Water taken from storage is distributed to receiving units. Materiel managers must ensure the water is prepared for transportation before distribution.

STOCK CONTROL

4-19. Supply support organizations will account for and label all stored water properly as part of the execution of the stock control function. Label containers with either "Non-Potable Water – Do Not Drink" or "Potable Water Only." Stock control also includes maintaining appropriate chlorine levels in accordance with TB MED 577/NAVMED P-5010-10/AFMAN 48-138_IP.

ASSET REPORTING AND ASSET VISIBILITY

4-20. Supply units execute the asset reporting function, which allows materiel management branches in the TSC, ESC, sustainment brigades, and DSB, to maintain visibility of water stocks. LOGSTAT reporting, distribution logs, supply logs, and production logs together create a comprehensive picture of where water stocks are present and how they are being distributed. Vertical and horizontal reporting of asset on-hand status is a critical component of asset visibility, requirements determination, and requirements validation. It

occurs at all echelons, with the frequency and commodities to be reported determined by the command. Asset reporting allows units at all levels to plan for future requirements and mitigate shortfalls. Asset visibility provides planners with the capability to determine location, movement, status, and identify water stockage levels support and prioritization

DISTRIBUTION AND SUPPLY

4-21. Supply and transportation organizations execute the distribution function. The distribution function aligns bulk and packaged water requirements to adequate transportation assets. Most water distribution is done with large tanks, including the HIPPO or fabric tanks pulled by trucks. Distribution and supply are performed iteratively and across echelons.

RETROGRADE

4-22. Supplied potable water is not typically retrograded once distributed to the supported unit. Potable water is consumed frequently, and it is more efficient to delay or cancel a delivery than to return water to a supplier.

MAINTENANCE

4-23. Maintenance of potable water includes maintaining the minimum free available chlorine standards as described in TB MED 577/NAVMED P-5010-10/AFMAN 48-138_IP. Supply units execute maintenance of potable water. Appendix D contains a table for chlorinating water given the volume.

DISPOSAL

4-24. Wastewater disposal falls under U.S. Environmental Protection Agency, local, or host-nation regulations and will usually require some form of permit. Chlorinated water is considered wastewater when being disposed. Supply units execute the disposal of wastewater. Consult TB MED 593 and TM 3-34.56/MCRP 3-40B.7 for more information.

STRATEGIC DISTRIBUTION MANAGEMENT AND MATERIEL MANAGEMENT

4-25. Reliable distribution management relies on effective communication within units and between echelons from the theater level down to the company. The following is a review of the roles and duties of bulk water planners and managers in strategic echelons.

THEATER SUSTAINMENT COMMAND

4-26. The TSC is the primary sustainment headquarters that links materiel management executed at the strategic level of warfare with the operational-level force. The TSC, which is focused on supporting an AOR, works in concert with combat support agencies and strategic partners, such as DLA and USAMC, to align national capabilities and resources to achieve strategic objectives. Figure 4-1 on page 56 shows the DMC organizational structure within the TSC.

4-27. The TSC maintains a theater-wide focus, participating in and coordinating with the applicable joint logistics boards and centers that resolve issues concerning competing priorities and the allocation of constrained resources. As required, the TSC establishes or participates in distribution management and materiel management boards or attends the joint transportation board to ensure that distribution management processes are linked with theater-level processes and boards.

DISTRIBUTION MANAGEMENT CENTER

4-28. The TSC DMC examines current operations to ensure success in achieving the effects that the combatant commander desires on the battlefield. It coordinates and synchronizes the movement of water within the theater and coordinates and synchronizes movements with unified action partners and ESCs entering and exiting the theater. The SPO heads the DMC. The DMC is a coordinating staff section unique to TSCs and ESCs. The functions of the DMC include operational contract support, distribution, transportation operations, materiel management, and field services. The branches of the DMC integral to water support operations in the theater are—

- DIB.

- Fuel and water branch.
- Transportation operations branch.

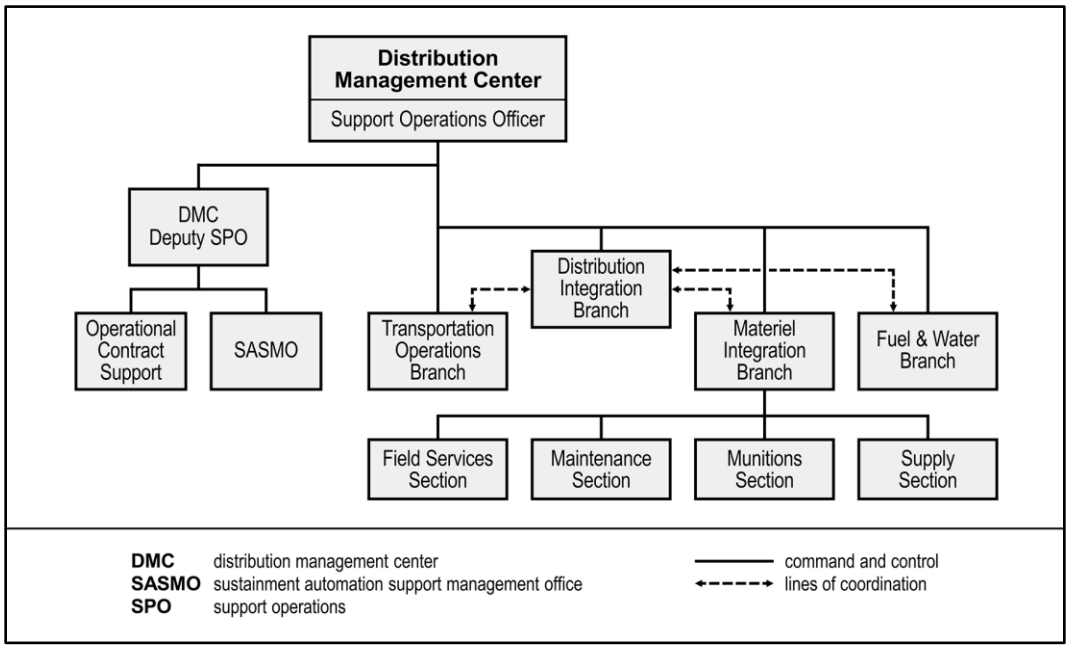

Figure 4-1. Theater sustainment command distribution management center staff

4-29. Specific functions of the TSC DMC are listed below:

- Establishes and maintains the sustainment common operational picture (COP).
- Develops, coordinates, and manages the theater distribution plan for water.
- Manages transportation operations (including mode, terminal, and movement control) and common-user land transportation support.
- Provides materiel management for bulk water.
- Integrates operational contract support into sustainment operations.
- Coordinates external water support requirements for supported units.
- Synchronizes water support requirements to ensure they remain consistent with current and future operations.
- Plans and monitors water support operations and adjusts meet support requirements.
- Coordinates with other operational and sustainment water staffs at each echelon.
- Prepares and distributes the external water support SOP that provides guidance and procedures to supported units.

Fuel And Water Branch

4-30. The DMC fuel and water branch staff executes materiel management of fuel and water. It plans, recommends resourcing, monitors, and analyzes water support in the AOR. The branch provides theater on hand visibility and recommends priority of issue. The key materiel managers for water within the DMC fuel and water branch include the branch chief, petroleum officer, and water treatment noncommissioned officers (NCOs). These managers execute the materiel management functions as the TSC supports theater sustainment.

4-31. The DIB manages water distribution throughout theater by using military, contracted, and locally procured assets. It coordinates with other branches in the DMC, as well as strategic partners, to monitor and manage theater stocks. The TSC fuel and water branch is generally concerned with operations happening in the forthcoming 30 or more days. Additional coordination for long-term water support is done with the combatant commander, theater Army, and quartermaster petroleum and water group or TPWG liaison. Water

system repair parts are procured through USAMC from commercial businesses. The branch coordinates with DLA to procure all water treatment chemicals and some water treatment system components.

4-32. The fuel and water branch staff plans and coordinates water support with subordinate organizations. The TSC coordinates with subordinate ESCs to manage the operational level of water support. Tactical water support is coordinated through sustainment brigades (including DSBs) and further subordinate units. Tactical water operations are informed by the planning and effort of the TSC fuel and water branch.

4-33. The fuel and water branch conducts extensive supply planning. It forecasts and establishes water stock levels at each support echelon to meet mission requirements. It will coordinate and respond to combatant command lead Service and multinational force logistics directives. Branch staff will coordinate with combatant command and theater Army G-4 planners to establish subordinate water storage points in accordance with the operation plan or OPORD. It will issue directives to expeditionary and sustainment brigades specifying unit support assignments.

4-34. The fuel and water branch staff determines water requirements in theater. It will forecast long-range materiel requirements, facilities, materials, and equipment needed to install and operate the water distribution system. Requirements determination includes a requirement to identify suitable sources for bulk water purification.

4-35. The fuel and water branch staff also plans for non-Army requests. Under DODD 4705.01E, the Army is the designated executive agent for all land-based water resources. Therefore, the Army is responsible for providing additional water support to other services, allies, local populations, and other entities.

4-36. While conducting supply planning, the fuel and water staff coordinates with—

- Combatant command and theater Army G-3 planners for operational timelines.
- Combatant command and theater Army G-4 planners for equipment density, allied and host-nation support density lists, and equipment arrival and departure timelines.
- Subordinate water planners for requests and consumption rate forecasts.

4-37. The DIB and transportation operations branch validate the transportation asset availability to distribute the water requirements. The staff validates space availability for distribution and storage methods (pipeline, tank, bladder) and the external support commodities needed to support the distribution system (security, engineers, other). They also coordinate with subordinate water planners to determine pipeline, hose line, bladder, barge, rail car, tank truck, and aircraft requirements.

4-38. TSC water materiel managers provide direction for receiving, producing, storing, and issuing water in accordance with theater Army priorities. The branch staff determines theater stockage levels, the build plan to get the theater up to those levels, and the priority of support.

4-39. The fuel and water branch assists in stock control by compiling the daily stockage reports from each subordinate unit and establishing policies and procedures for consumption accountability. The fuel and water branch maintains visibility on the assets under its control by accounting, maintaining stock status, maintaining in-transit visibility, status reporting, and inventory actions. The fuel and water branch—

- Compiles daily inventory reports and maintains daily distribution schedules for the future.
- Monitors water points for shortages, excess, and stockage.

4-40. The DIB and transportation operations branch direct water distribution in accordance with the distribution network layout. The fuel and water branch coordinates with DIB planners for transportation requirements in accordance with the distribution plan and assists in expediting critical requests. The fuel and water branch monitors water points for shortages, excess, and stockage; issues cross-leveling notices; and redirects the transportation of water as needed.

Distribution Integration Branch

4-41. The DIB contains distribution managers who schedule movement of water forward into the support area based on a combination of available storage, distribution assets, and anticipated customer demands. The branch provides theater on hand visibility and recommends priority of issue. The staff within the DIB includes several plans and operations officers and NCOs. The transportation NCOs coordinate with the transportation

operations branch; the logistics, petroleum, and materiel management NCOs coordinate with the fuel and water branch.

4-42. The DIB coordinates and synchronizes the movement of all water into and out of the AOR. The DIB synchronizes and integrates materiel and transportation requirements into distribution actions supporting operational-level sustainment support throughout the AOR. Distribution integrators in the various SPO staffs develop the distribution plan for inclusion in the G-3 or S-3 OPORD. This includes, but is not limited to, assistance with course of action development and analysis. This function queues the materiel to be moved according to priority and ensures transportation modes with adequate haul capacity are allocated to distribute the materiel. The DIB relies on coordination and information exchange between the materiel management, fuel and water, and transportation operations branches.

4-43. The DIB requires a complete understanding of the distribution network to optimize capabilities and task subordinate organizations in support of ongoing and future operations. The DIB plans and synchronizes distribution operations in the theater distribution network to include visibility and capacity management. The primary functions of the DIB are listed below.

- Creating the theater distribution plan, including the water distribution network.
- Comparing theater distribution operations with the theater Army's concept of operations to ensure compliance with the theater Army commander's priorities.
- Monitoring and assessing water support operations for impact on future operations.
- Comparing supported unit requirements and water consumption rates with distribution capabilities and tracking water deliveries to final destinations.

Transportation Operations Branch

4-44. The transportation operations branch contains the transportation managers and executes the transportation management functions. It is composed of several transportation officers, mobility warrant officers, and NCOs. This branch maintains liaison with joint deployment and distribution operations centers, contract transportation providers, mode operators, and supported units. This branch manages availability of both U.S. and host-nation common-user land transportation assets and provides theater-level liaison to host nations and for contracted assets. Common-user land transportation assets are DOD-controlled land transportation equipment and facilities designated for common use in theater.

4-45. The transportation operations branch supports the DMC's planning efforts for operational plans, concept plans, and major operations by providing estimates, requirements, assessments, and any additional information the DIB requires to support multiple planning efforts. Transportation managers coordinate with movement control units to develop theater highway regulation, traffic circulation, and maneuver and mobility support plans. The branch manages all facets of transportation information related to coordinating and evaluating all methods of transportation movement control and logistics support. Additional examples of transportation operations branch responsibilities are listed below:

- Monitoring movements into, out of, and across the AOR.
- Creating the movement program for inclusion within the theater distribution plan.
- Tracking the implementation of the movement program executed by the movement control battalion to ensure compliance.
- Managing transportation operations (including mode, terminal, and movement control) and common-user land transportation support.
- Monitoring and assessing transportation operations for impact on future operations.

4-46. The transportation operations branch executes the controlling function for the physical movement of bulk water. The DMC sets priorities of support based on theater Army and combatant commander direction and considers all modes of transport, including inland surface transportation (pipeline, rail, road, and inland waterway), sea transport (coastal and ocean), and air transportation while maintaining visibility of distribution assets. The TSC DMC manages all facets of transportation and enforces priorities for transportation.

COMMAND POST OPERATIONS

4-47. Command post operations provide the commanders a means to execute continuous close coordination, synchronization, and information sharing across staff sections. Command post operations performed by the TSC include use of a joint fuel and water board, various movement boards, a logistics synchronization matrix, and COP.

Fuel and Water Board

4-48. The TSC will participate in or lead a joint fuel and water board. The joint fuel and water board is a recurring meeting of Service and stakeholder agency personnel that synchronizes liquid logistics across the participating services. It identifies current and predicted critical shortfalls, sets support priorities, provides support guidance, and highlights issues requiring coordination with joint staff, other combatant commands, or partner nations. Attendees may include liaisons or representatives from the TSC's fuel and water branch, DIB, transportation operations branch, joint services, ESC, strategic partners, and others.

Movement Boards

4-49. Movement boards manage transportation policies, priorities, LOC status, convoy protection, synchronization, and transportation asset allocation to support theater distribution operations. In the event that an ESC is not employed in theater, the TSC will establish movement boards as discussed in detail later under the ESC section of this chapter.

Logistics Synchronization Matrix

4-50. The TSC logistics synchronization matrix tells supported units what supplies will be received, when, and the method of delivery. It enables the TSC commander, the SPO, and the staff to identify and deconflict potential problems. The synchronization matrix changes as requirements and operations change and must be shared every time it is updated.

Common Operational Picture

4-51. Logisticians develop a COP as required. The current operations cell will normally develop and maintain the COP. Ideally, the COP is automated, requiring minimal manipulation by command posts. The G-3 and S-3 in the current operations cell develop and maintain the COP. The TSC COP will be very similar to the theater Army COP, with additional information that the TSC commander requires. The DMC provides updated information to current operations to update the COP.

OPERATIONAL DISTRIBUTION MANAGEMENT AND MATERIEL MANAGEMENT

4-52. Operational materiel management and distribution management are concerned with completing the current mission and preparing for the next mission. Operational materiel management typically concerns tasks and plans for the forthcoming three days to three weeks, depending on mission variables. Materiel management at the operational level involves asset visibility, resupply, storage, protection, maintenance, stock control, retrograde, asset reporting, and disposal of supplies. Materiel managers must understand the joint force commander's requirements and priorities for supporting combat operations. Materiel managers at the operational level play an integral role in linking strategic resources to tactical requirements.

EXPEDITIONARY SUSTAINMENT COMMAND

4-53. The ESC is the primary sustainment headquarters focused on executing materiel management at the operational level of warfare. Operational-level distribution management and materiel management ensures that units at the tactical levels of execution have enough resources allocated to complete the objective. If an ESC is not deployed within the theater of operations, the TSC will expand its focus to encompass the operational level of warfare. If a TSC is not deployed, the ESC assumes the role of the TSC. Multiple ESCs may be operating in the same geographical area. For example, an ESC attached to a TSC and a composite supply company assigned to a corps may be in close proximity.

4-54. The ESC coordinates with the TSC, the J-4, or the theater Army G-4 to establish water storage locations and projected storage and distribution points in the operations plan and OPORD. The ESC provides input to the TSC or theater Army commander on feeding and water operations, capabilities, and options to mitigate shortfalls. The ESC priorities are informed by those of the theater Army G-4 and TSC and are passed on to subordinate units. The ESC issues directives to subordinate sustainment brigades and specifies unit support relationships.

4-55. Figure 4-2 depicts the staff sections within the ESC DMC. The DMC is headed by the SPO officer and is a coordinating staff section. The DMC's focus is distribution management. The DMC staff is continually evaluating distribution networks and integrating products and assessments with the remainder of the ESC coordinating staff. The DMC does this while supporting the ESC G-3 future operations cell or operational planning team. The more thoroughly the DMC anticipates shortfalls and plans for resolutions, the fewer challenges the sustainment brigade will have.

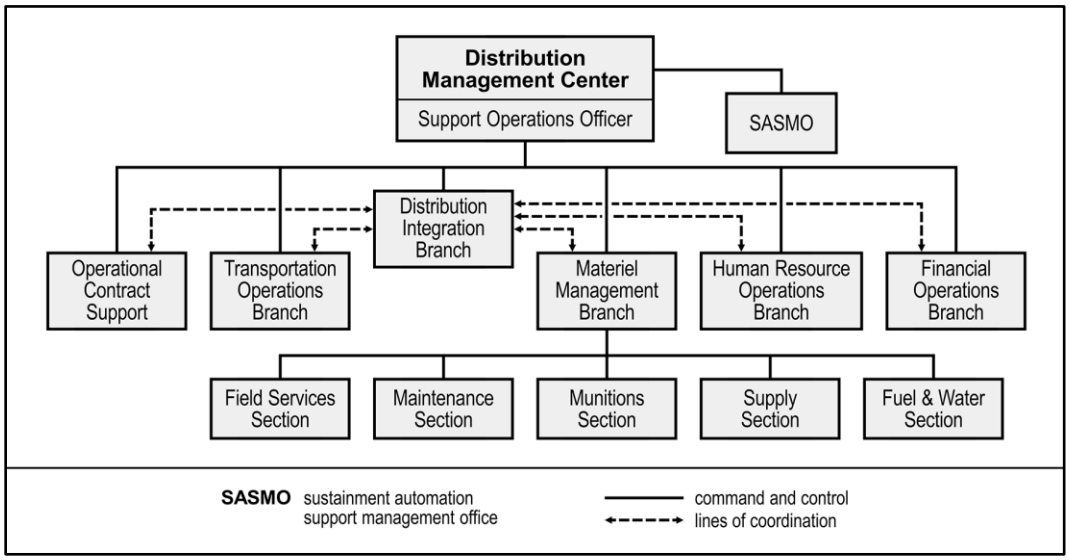

Figure 4-2. Expeditionary sustainment command distribution management center staff

4-56. The ESC SPO within the DMC calculates projected consumption rates and receives actual consumption rates from subordinate units and compares them to determine requirements. These requirements are validated with those generated from the TSC. The DMC maintains visibility across the distribution network within the ESC's supported AO. When discrepancies or shortfalls are identified, it is necessary to make decisions such as whether additional purification or transportation assets/units need to be deployed or redeployed, and whether additional support from contractors is needed.

Fuel and Water Section

4-57. The fuel and water section within the materiel management branch of the DMC is responsible for executing materiel management of water. It calculates projected consumption rates and receives actual consumption rates from subordinate units and compares them to determine requirements. These requirements are validated with those generated from the TSC. The DMC also maintains visibility across the distribution network within the ESC's AO. When discrepancies or shortfalls are identified that cannot be resolved by the ESC, the fuel and water section staff relays them to the TSC where decisions are made on further water support.

4-58. The ESC fuel and water section conducts extensive water supply planning and coordination with subordinate organizations. This section's staff coordinates with TSC and maneuver G-4 planners to establish the projected subordinate water purification and storage points in concert with the operation plan and/or OPORD. They prepare guidance for the water portion of support plans, base development plans, and future operations. The staff issues water support tasks in the OPORD to sustainment brigades specifying unit support assignments and establishes the contingency stock levels.

4-59. The ESC fuel and water section assists with water requirements determination. It forecasts long-range water requirements, facilities, materials, and equipment needed to install and operate the water distribution system. The section staff coordinates with—

- TSC, joint task force J-3, and theater Army G-3 planners for operational timelines.
- TSC, joint task force J-4, and theater Army G-4 planners for equipment density, allied and host-nation support density lists, and equipment arrival and departure timelines.
- TSC and DMC, including the fuel and water branch.
- Subordinate water planners for fuel requests and consumption rate forecasts.

4-60. The fuel and water section determines—

- The water distribution network layout in accordance with undeveloped and developed theater capabilities.
- The size of water support unit structure required to perform distribution tasks at each level of supply.
- Host-nation, humanitarian, and other non-Army equipment requirements.
- Host-nation equipment interoperability with Army water systems (for example, NATO nations may use different couplers and adapters).

4-61. The ESC's fuel and water section validates operational water requirements. It establishes the water support concept and the basic stockage concept. It validates space availability for distribution and storage methods (pipeline, tank, bladder, and others), as well as the external support organizations needed to support the distribution system (security, engineers, and others). It directs subordinates to establish their purification and supply plans in accordance with their support designation and prepare issue schedules.

4-62. To assist in validating requirements, the staff coordinates with—

- TSC G-3 and G-4 to validate the water distribution plan and its methods.
- PM personnel for water quality standards.
- Subordinate water planners to determine hose line, bladder, barge, rail car, storage tank, truck, and aircraft requirements.

4-63. ESC water materiel managers provide direction for receiving, storing, and issuing water stocks in accordance with support priorities. Water materiel managers establish business rules for reporting and forecasting subordinate consumption rates and recommend policies, priorities, allocations, and criteria for priority requests. They are also responsible for operating in accordance with safety and environmental procedures.

4-64. The fuel and water section assists in stock control by compiling the daily stockage reports from each subordinate unit and monitoring purification point and storage excess posture. The stock control conducted also assists in forecasting near-term or future requirements. The fuel and water section establishes policies and procedures for consumption accountability. It maintains visibility on the assets under its control by accounting, maintaining stock status, maintaining in-transit visibility, status reporting, and inventory actions.

4-65. The DIB directs water distribution in accordance with the water distribution network layout. The fuel and water branch coordinates with DIB planners for transportation requirements in accordance with the distribution plan and assists in expediting emergency or critical water requests. The fuel and water section staff monitors storage and purification points for shortages, excess, and stockage, issues cross-leveling notices, and redirects flow of transportation of inbound water as needed. It submits theater movement requests to the DIB for movement of water to fill immediate shortages.

Distribution Integration Branch

4-66. The DIB coordinates and synchronizes the movement of all supplies into and out of the AO in collaboration with the G-3 operations. The DIB develops the distribution plan in collaboration with the G-3. The branch integrates materiel and transportation requirements into distribution actions supporting operational-level sustainment support throughout the AO. The DIB relies on coordination and information exchange between the fuel and water section and transportation operations branch to synchronize and integrate the allocation of resources for movement of bulk water.

4-67. The DIB coordinates directly with the movement control battalion. The transportation operations branch directs the distribution of transportation resources to meet the fuel and water requirements and optimize distribution flow through its movement plan.

4-68. The DIB in an ESC normally includes several plans and operations officers and two senior NCOs, one as petroleum supply sergeant and one as petroleum distribution supervisor. The petroleum NCOs serve as water materiel managers in addition to petroleum managers. The major water tasks of the DIB are—

- Maintaining a COP for bulk water.
- Coordinating with the transportation operations branch to ensure motor and rail assets are available to support water movement requirements.
- Managing water flow within the assigned AO; coordinating with forward storage areas, BSBs, and sustainment brigades regarding water resupply.

4-69. DIB staff members require a complete understanding of the distribution network to optimize capabilities and task subordinate organizations in support of ongoing and future operations. The DIB plans and synchronizes distribution operations in the theater distribution network to include visibility and capacity management. The primary functions of the DIB are listed below:

- Creating the theater distribution plan.
- Comparing theater distribution operations with the Army Service component command concept of operations to ensure they are synchronized and executed according to the theater Army commander's priorities.
- Monitoring and assessing sustainment operations for impact on future operations.
- Comparing supported unit requirements with distribution capabilities and tracking commodities (including water) to their final destination.

4-70. The distribution integration component of the distribution process—

- Is coordinated by the ESC and sustainment brigade DIBs.
- Is executed by the CSSB, DSSB, and BSB SPO sections.
- Queues the materiel to be moved according to priority and ensures transportation modes with adequate haul capacity are allocated to distribute the materiel.

4-71. Distribution managers—

- Use the information provided by the materiel management component to coordinate with the transportation component for allocation of transportation modes to move the materiel.
- Provide the transportation component with commodity, quantity, priority, and recommended mode.

Transportation Operations Branch

4-72. The transportation operations branch contains the transportation managers, who coordinate with the G-3 and DIB to direct the distribution of transportation resources to meet the requirements, and to optimize distribution flow. The ground distribution system and aerial delivery operations are included in the distribution and movement plan created by the branch. The transportation operations branch coordinates with contract transportation providers, mode operators, and supported units and manages common-user logistics transportation assets. The transportation operations branch provides liaison with host nations to maximize distribution capability.

4-73. The transportation operations branch coordinates with contract transportation providers, mode operators, and supported units. The goal of this coordination is to create an optimally efficient distribution network that employs all available transportation modes.

COMMAND POST OPERATIONS

4-74. Command post operations provide commanders a means to execute continuous close coordination, synchronization, and information sharing across staff sections. Command post operations performed by the ESC include using a fuel and water board, various movement boards, a logistics synchronization matrix, and COP.

Fuel and Water Board

4-75. The ESC leads a fuel and water coordination board. The coordination board is a recurring meeting to synchronize liquid logistics across the operational level of the theater. It identifies current and predicted operations and critical shortfalls, sets support priorities based on current operational requirements, provides support guidance, and highlights issues requiring coordination with higher headquarters. Attendees may include representatives from the ESC fuel and water section, DIB, transportation operations branch, petroleum groups, sustainment brigade liaison, and others. ESCs and corps sustainment commands operating in the same AOR are all represented.

Movement Boards

4-76. Movement boards manage transportation policies, priorities, LOC status, convoy protection, synchronization, and transportation assets allocation to support theater distribution operations. The two varieties of movement control boards are the movement synchronization board and the movement allocation board.

4-77. The movement synchronization board coordinates the execution of movement priorities across the AO. The transportation branch mobility officer leads the board. Attendees may include sustainment brigades, Army field support brigades, CSSBs, movement control teams, and transportation battalion SPO. The board is held on a schedule determined by the ESC commander's battle rhythm.

4-78. The movement allocation board uses the outputs from the movement synchronization board to finalize movement allocation (mode, loads, route, and security) with sustainment brigades and subordinates 96 hours before execution. Attendees may include sustainment brigade SPO commodity representatives, movement control battalion, CSSBs, and movement control teams. The movement control battalion leads the board.

Logistics Synchronization Matrix

4-79. The ESC logistics synchronization matrix tells supported units what supplies will be delivered, when, and the method of delivery. It enables the ESC commander, the DMC, and staff to identify and deconflict potential problems. The synchronization matrix changes due to requirement and operational changes. The matrix must be shared every time it is updated.

Common Operational Picture

4-80. Logisticians develop a logistics COP as required. The COP summarizes relevant, common data and information within a commander's area of interest. Ideally, the COP is automated, requiring minimal manipulation by command posts. The COP is normally developed and maintained by the current operations cell. The COP will be very similar to the theater Army COP and TSC, with additional information the ESC commander requires. The DMC provides updated information to current operations to update the COP.

TACTICAL DISTRIBUTION MANAGEMENT

4-81. The sustainment brigade, DSSB, CSSB, BSB, and functional companies are the primary sustainment headquarters focused on executing materiel management at the tactical level. Materiel managers at this level provide supplies supporting combat forces conducting battles and engagements. They ensure responsive supply replenishment to combat forces based on the supported commander's priorities and anticipated requirements. Tactical-level units submit LOGSTAT reports to provide situational awareness regarding the rate of consumption and forecasted requirements for bulk water. Logisticians in the sustainment brigade view the same reporting data to guide decisions related to water production and distribution efforts.

SUSTAINMENT BRIGADE

4-82. The sustainment brigade executes distribution management and materiel management as directed by the sustainment command and as part of the theater-wide distribution plan. The focus of the sustainment brigade is to oversee execution of current sustainment objectives through units at the tactical level. The sustainment brigade determines necessary support requirements and arrays CSSBs as necessary. These units are organized to operate multimodal distribution hubs and maintain visibility of the bulk fuel distribution system. The sustainment brigade may participate in the ESC-led movement board. The sustainment brigade

and its subordinate units receive water in the corps support area and either distribute it in the corps support area or transport it forward into the division support area.

Brigade S-3

4-83. The sustainment brigade S-3 synchronizes and integrates sustainment operations with all warfighting functions across the current operations and future operations planning horizons. The S-3 section integrates current and future operations with the plans integrating cells in accordance with the commander's intent and planning guidance. It coordinates with supported units to synchronize future operations and the transition from future operations to the current operation without loss of momentum or unit integrity. It manages brigade staff mission planning, course of action development, rehearsals, operational planning, and after action reviews.

Brigade S-4

4-84. The sustainment brigade S-4 is the principal staff officer for internal sustainment and materiel readiness. Primary tasks for the brigade S-4 include sustainment operations and plans, supply, maintenance, transportation, and field services. The S-4 provides staff oversight of food services and oversees the deployment and redeployment of brigade and subordinate units.

Support Operations Staff

4-85. Figure 4-3 depicts the organization of the sustainment brigade SPO staff. The SPO staff plans and coordinates support operations by balancing external sustainment requirements with unit capabilities. The SPO staff conducts distribution operations, maintenance management, operational contract support, and management of general supplies, including water. The SPO staff includes a supply and services branch that is concerned with the procurement and storage of water and the DIB that matches transportation assets with water resources to maintain supply levels at supported locations.

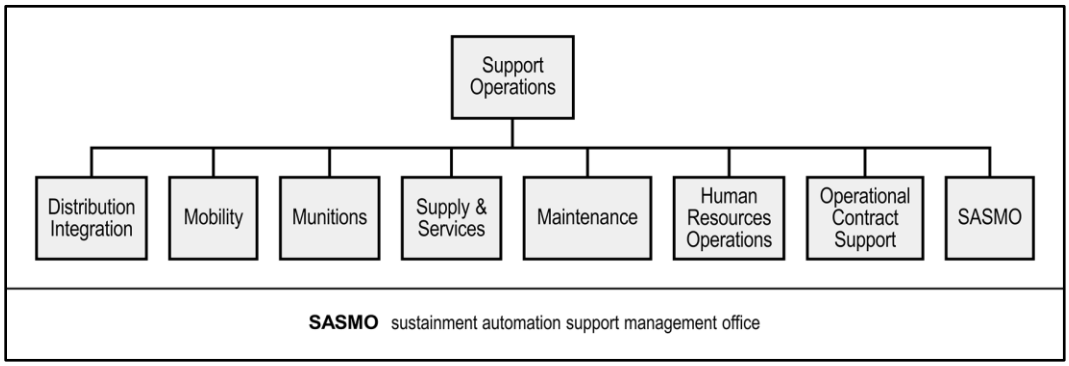

Figure 4-3. Sustainment brigade support operations staff organization

4-86. The supply and services branch conducts materiel management and plans and coordinates field service support. This branch determines requirements and recommends priorities for the allocation and distribution of supplies. It monitors procurement of commodities and makes recommendations for distribution and redistribution within the brigade's assigned support area. It maintains visibility of on-hand and in transit supply stocks using automated logistics systems.

4-87. The supply and services branch fuel and water section controls and manages the issue of water to supported organizations. It directs the receipt, storing, inspection, testing, quality, supply, and accountability of the bulk fuel and water stocks for the operational area.

4-88. The DIB plans, coordinates, and synchronizes distribution operations. The DIB consolidates distribution requirements from all sections of the SPO staff, deconflicts competing requirements, prioritizes support and movement, and creates the distribution plan. The distribution plan describes how sustainment flows from the sustainment brigade to supported units. This branch plans and maintains visibility of the

execution of the distribution plan in accordance with the concept of support. It synchronizes operations within the distribution system to maximize throughput from the production sites to the supported units.

4-89. The DIB must coordinate with the subordinate CSSB staff to determine transportation feasibility. If the distribution of water from the CSSB cannot be accomplished using organic assets, the sustainment brigade allocates or requests the necessary resources.

4-90. The SPO compiles the LOGSTAT reports from the attached CSSBs into a zero-balance report. The zero-balance report summarizes all on-hand, due-in, and due-out water stockage and deliveries. With this information, the SPO can assess and ensure appropriate levels of effectiveness, identify and mitigate shortfalls, and plan for near-term operations. Supply shortfalls that cannot be resolved by the sustainment brigade are forwarded as a request for additional support to the next higher level of command.

DIVISION SUSTAINMENT BRIGADE

4-91. The DSB operates like any other sustainment brigade. The DSB has an organic DSSB and division sustainment troops battalion and may be augmented by attaching additional CSSBs. The DSB staff structure is very similar to a sustainment brigade but is smaller.

4-92. The DSB and its subordinate units assigned to a division provide direct support to all assigned and attached units in an operational area as directed by the division commander. The DSB provides general support logistics, including water support, to non-divisional forces operating in the division AO.

COMBAT SUSTAINMENT SUPPORT BATTALION

4-93. The CSSB is task-organized with functional companies and other subordinate units to execute tactical level supply. The CSSB and subordinate units conduct transportation operations, distribution management, and materiel management functions to execute the distribution plan. The staff sections at the CSSB and below are much smaller than those at higher echelons and focus on the execution of distribution operations rather than extensive, long-term planning.

4-94. The CSSB, when task-organized to conduct theater distribution, depends on the sustainment brigade to conduct distribution planning and integration. CSSB transportation assets execute distribution and conduct resupply and replenishment missions.

4-95. Unit distribution is the routine method the CSSB uses to support the brigade. The CSSB transports supplies to the BSB distribution company. The CSSB may conduct throughput distribution when tasked with the theater distribution mission. An example of throughput distribution is the CSSB distributing supplies directly to a FSC, bypassing the BSB distribution company.

Battalion Coordinating Staff

4-96. The CSSB S-3 is responsible for the overall conduct of the deployment process. The S-3 receives input from the battalion SPO and synchronizes and prioritizes the battalion's lines of effort. The S-3 and SPO staff create the battalion's concept of operations, which expands on the commander's intent. The concept of operations clearly describes how subordinate units cooperate and establishes a specific sequence of actions to achieve the end state.

4-97. The S-4 coordinates strategic and operational deployment. The S-4 focuses on internal requirements and supply functions and generates the internal LOGSTAT report. The S-4 determines supply requirements and coordinates the procurement and storage of supplies and equipment. The S-4 also conducts funds management, including the funding approval portion under the Global Combat Support System Army.

Support Operations Staff

4-98. The SPO staff plans, synchronizes, and manages distribution and resupply. The CSSB SPO staff section is significantly smaller than those in higher echelons. There is one NCO dedicated to the materiel management of water and a small number of transportation and distribution managers. When tasked with area support, the SPO staff develops the concept of operations for their designated portion of the support area.

4-99. The division G-4 communicates requirements to the CSSB SPO. The CSSB does not decide the priority of support. In situations where conflicting support priorities exist, the SPO staff consults with the sustainment brigade and sustainment command. The SPO staff maintains asset visibility across the subordinate functional units. It coordinates with sustainment brigade planners to—

- Set contingency stockage objectives.
- Set disposition directives for residual disposal.
- Establish AO water supply points in compliance with the operation plan/OPORD.
- Determine area and unit support assignments.

4-100. The SPO staff coordinates with the sustainment brigade to properly identify which units are supported by the CSSB in order to ensure accurate reporting on requirements and maintain sufficient stockage levels. The sustainment brigade or other appropriate higher headquarters defines support relationships. CSSBs tasked with area support provide sustainment support to units located in or passing through their assigned areas within a set geographic boundary. This geographic boundary may cross multiple battalion or brigade unit boundaries. When tasked with area support, the SPO staff develops the concept of operations for their designated portion of the support area.

4-101. The CSSB SPO assists in requirements determination. The SPO forecasts long-range water requirements, facilities, materials, and equipment needed to operate water supply and purification sites. The SPO staff forecasts and establishes supply stockage levels to meet mission requirements. The SPO coordinates with the sustainment brigade and supported unit water planners for water requests, area support, and consumption rate forecasts. It coordinates with the TSC or ESC for resupply capability. It coordinates with sustainment brigade planners to—

- Set the contingency stockage levels.
- Establish the water supply points in compliance with the operations plan or OPORD.
- Identify supported units.
- Establish operational timelines.
- Array equipment, allied and host-nation support density lists, and equipment arrival and departure timelines.
- Conduct quality surveillance procedures and safety or environmental mitigation requirements.
- Determine methods of water resupply and the number of water support units required to perform distribution tasks.

4-102. The SPO validates requirements, including—

- Space availability for distribution and storage methods.
- External support requirements to support the distribution system, such as engineer or security.
- Distribution methods in accordance with its support relationship (direct or general).

Functional Units

4-103. The functional companies and other units under the command of the CSSB conduct some material management functions. Procurement, storage, and stock control of bulk water is conducted through water support companies and CSCs. Bulk water is produced and stored on-site within a water platoon. The CSSB directs the distribution of water from the purification elements to the supported units. Water platoons in both CSCs and water support companies have some distribution capacity. Truck companies use all available water distribution assets to increase bulk water transportation capacity.

4-104. Daily water production logs from purification units are a critical component of stock control and asset reporting. Production logs are a record of the amount of water produced and capture historical information that is used to schedule future procurement requirements and resupply of water and treatment chemicals. In addition, the log is used to schedule maintenance services. For these reasons, data entered on production logs should be complete and accurate. DD Form 1713 (*Daily Water Production Log–3000 GPH ROWPU*), DD Form 1713-2 (*Daily Water Production Log–1500 GPH TWPS*), and DD Form 1713-3 (*Daily Water Production Log–125 GPH LWP*) are used to record data on each individual ROWPU, TWPS, or LWP respectively. DD Form 1717 (*Water Point Daily Production Summary*) is used to compile all production data into a daily summary. Quartermaster units use DD Form 1715-1 (*Daily Water Distribution Log*) to track receipt and distribution of bulk water. The distribution log allows units to calculate how much water is on

hand at the end of each day (total received minus total dispatched). The log provides accurate historical data that aids logistics planners in establishing a water distribution schedule for supported units.

4-105. Daily production and accurate LOGSTAT reports enable sustainment brigade planners to forecast daily requirements. Checking the production rates against unit consumption rates enables planners to identify potential shortfalls. The sustainment brigade requires timely, regular reports to allow time for operational and strategic command posts/units to respond.

4-106. Both the water support company and CSC can produce more bulk water than can be stored or distributed with organic equipment. The CSSB tasks attached transportation assets to distribute water to units for storage or consumption. The CSSB can also request additional storage detachments from the sustainment brigade.

4-107. The CSSB's attached water support company or CSC plays a major role in the procurement and storage of bulk water. Its tasks include—

- Establishing and operating the purification site as directed by the sustainment brigade. This includes the field maintenance.
- Receiving, storing, and issuing stocks in accordance with sustainment brigade directives and support priorities.
- Reporting supported unit consumption rates.
- Inspecting, enforcing, and reporting status of portability with PM personnel.

DIVISION SUSTAINMENT SUPPORT BATTALION

4-108. The DSSB is organic to the DSB. The DSSB has an organic CSC that provides water support to the division and forces within the division AO. The staff sections within the DSSB are structured the same way as a CSSB but have fewer personnel. DSSBs may use throughput distribution more often than a regular CSSB. The CSC is organic to the DSSB. The DSSB distributing water directly to an FSC in the division area and bypassing the BSB distribution company is an example of throughput distribution.

BRIGADE SUPPORT BATTALION

4-109. The BSB provides logistics support to a maneuver brigade. The BSB plans, coordinates, synchronizes, and executes replenishment operations in support of brigade operations. Staff sections within the BSB are much smaller than those in echelons above brigade headquarters. It distributes all classes of supply (including food and water) and conducts several other support activities but has no water treatment capability. The BSB commander must understand the supported brigade commander's concept of operations so that the BSB can provide the water support necessary to preserve the brigade's combat power and maintain its OPTEMPO. The BSB accomplishes this by maintaining visibility of the distribution network within the supported brigade AO, and by monitoring water consumption reported by the brigade maneuver battalions.

4-110. Maneuver brigades deploy with a prescribed load of supplies. This permits them to operate for a limited period before needing replenishment. Replenishment is provided from sustainment stocks that have been positioned in the AOR. Sustainment stocks continue to flow during the initial early entry buildup. The BSB enables brigade activities by focusing on distribution and redistribution as forces move or priorities shift.

4-111. Regularly scheduled combat-configured loads (with packages including potable and non-potable water tailored to the brigade) enable offensive momentum and freedom of action. If communications are degraded, the BSB will automatically push critical supplies to units rather than waiting for requests in order to maintain OPTEMPO. Units fighting enemy infantry in restricted and urban environments often use large amounts of water.

4-112. The BSB SPO, S-3, and subordinate companies must constantly monitor the support requirements of the supported brigade and immediately notify the BSB commander if a capability shortfall is identified. The maneuver brigade commander, staff, and supported battalion commanders must constantly assess and report requirements to the BSB.

4-113. When the supported brigade's logistics support requirements exceed BSB capability, immediate coordination must occur between the BSB commander and staff, maneuver brigade commander and staff,

and the supporting sustainment brigade. The BSB may require additional capability for various reasons, including increase in supported population, scope of mission, or equipment density due to extensive brigade reorganization.

BSB Support Operations

4-114. The BSB SPO is the principal liaison between the supported brigade and the BSB. Requirements are determined in coordination with the brigade S-1 and S-4. The BSB SPO communicates the requirements to the DSB SPO. The type, scope, and projected timeline of the support required are given to the DSB; the DSB determines how to provide support. The SPO coordinates with the supported brigade S-4 and DSB planners to set the contingency stockage levels and establish water points in compliance with the operation plan and OPORD.

4-115. Command relationships of supported organizations must be clearly defined during the planning process. When the brigade receives a capability attached from support brigades (such as a field artillery brigade), the BSB SPO must understand the task organization and the support relationship. The SPO identifies the capabilities required to meet mission requirements that exceed the capacity of the BSB. The brigade S-4 requests additional water distribution capabilities to meet mission requirements. The SPO section coordinates with other divisional and echelon above brigade assets for the additional support. The SPO will array those capabilities on the battlefield to integrate with the BSB capabilities. Logistics planners require some basic information from the attached unit's S-4 to develop a synchronized concept of support. Some considerations are—

- Quantity of personnel.
- Quantity and type of materiel.
- Supply consumption history.
- When attachment is effective, and for how long.
- The support assets that will accompany the attached element.
- When and where replenishment will occur, and which individual or unit has primary responsibility for planning and coordinating this action.

4-116. The SPO staff provides input to the BSB S-3 to produce orders for subordinate unit operations. These orders can include a sustainment synchronization matrix to graphically display which support functions are executed when and where during a mission. This matrix ensures that all sustainment functions to be executed and units to be supported (including time and location) during a mission are accounted for and identifies support conflicts if they exist. The synchronization matrix may be provided to the brigade S-4 for inclusion in annex F of the BSB's OPORD. The BSB S-3 includes the synchronization matrix as a tab to annex C (Operations) of the BSB's OPORD. The BSB's SPO section uses logistic status reports and running estimates to update the synchronization matrix for future operations.

4-117. The supported brigade S-4 and S-3 determine which units receive designated supplies and pass that information to the BSB SPO. The SPO acknowledges the required supply actions per the brigade S-4, synchronizes distribution, updates the supply point on-hand status, forecasts required supply actions, and plans resupply. The BSB SPO and S-3 must be cognizant of maneuver brigade task organization changes to make recommendations to the brigade commander on shifting logistics capability. This is especially critical in supporting the main effort. The LOGSTAT report must be updated with the supply points' adjusted balances and additional forecasted requirements.

4-118. The BSB SPO routinely conducts a brigade logistics synchronization meeting. Attendees may include the brigade S-4, FSC commanders, BSB SPO section staff, maneuver battalion executive officers and S-4s, as well as any supporting sustainment coordinating staff. Attendees consider calendars, unit battle rhythms, current orders, logistics reports, commander's guidance, and other pertinent information.

BSB Distribution Company Water Section

4-119. The fuel and water platoon's water section stores and distributes bulk water for the brigade. The water section is very small; the senior water treatment NCO acts as the primary distribution and materiel manager. The platoon's water section stores and distributes bulk water for the brigade. Water operations in the distribution company include forward mobile storage and distribution within the brigade. The type of water

that is distributed and supplied depends on the type of operation conducted by the supported brigade and the maturity of the theater's distribution network. Brigades past the corps rear boundary up to the forward line of troops should expect bulk water delivered. Bottled water requires contract support and additional distribution assets and is more expensive. The distribution company conducts replenishment operations in two ways—supply point distribution, in which the FSC comes to the BSB distribution company to procure water, or unit distribution, where the distribution company delivers to the FSCs.

4-120. The water section is capable of operating one water point and can hold 20,000 gallons of water. This section can move all 10 organic HIPPO tank racks with organic transportation assets. The water section procures potable water from water platoons in either a CSC or a water support company and distributes the water to forward support companies or supplies it to end users as required.

FORWARD SUPPORT COMPANY

4-121. The role of the FSC is to provide logistics in direct support to maneuver units. The FSC does not have the organic capability to purify, store, or distribute potable water to maneuver units. The FSC's water storage capability is limited only to internal operational requirements. However, to extend the reach of the BSB into the maneuver area, the BSB may assign HIPPOs and other water support equipment to the FSC to expedite the resupplying of maneuver units allowing the FSC to deliver resupply packages that can include water procured from the BSB. FSC commanders will coordinate with the supported battalion's S-4, the executive officer, and the BSB SPO. The FSC commander ensures that logistics operations are conducted in accordance with the supported commander's concept of operations.

This page intentionally left blank.

Chapter 5
Safety

This chapter describes water quality standards, general safety practices related to operating water purification equipment, and environmental stewardship. The water quality standards address the physical, chemical, biological, and other agents that have potentially adverse effects when consumed by personnel.

WATER QUALITY STANDARDS

5-1. Water quality standards were developed to protect consumers against performance-degrading effects resulting from the ingestion of water in an AO. Standards for water quality were developed for water constituents and impurities that naturally occur or that have been introduced by humans into the water (see TB MED 577/NAVMED P-5010-10/AFMAN 48-138_IP). The standards apply to water produced by military water support units, bottled water, tactically packaged water by military units, and host-nation water. When water of low physical quality must be used, the appropriate command level will make that decision based on medical recommendations.

HYDROLOGIC CYCLE

5-2. The hydrologic cycle is the term used to describe the natural circulation of raw water in, on, and above the earth. Water occurs in many forms as it moves through this cycle. The steps in the hydrologic cycle include precipitation, infiltration, runoff, evaporation, transpiration, and condensation. Water is placed in the air by evaporation from water and land surfaces and by transpiration from plants. It then condenses to produce cloud formations and returns to earth as precipitation. Some of this water evaporates, while some flows as runoff into lakes and streams. The remainder goes into the soil and then into underlying rock formations by seepage or infiltration. The water which has seeped through the earth will finally find its way to the surface through springs. Water can also flow through porous media until it is intercepted by streams, lakes, or oceans. This cycle does not always progress through a regular sequence; steps may be omitted or repeated at any point. For example, precipitation in a hot climate may be almost wholly evaporated and returned to the atmosphere.

PHYSICAL QUALITY

5-3. The principal physical characteristics of water are color, odor, taste, turbidity, and temperature. Each of these is described as follows:

- Color in water comes from colored substances such as vegetable matter dissolved from roots and leaves, from humus, or from inorganic compounds such as iron and manganese salts. The clear color standard is designed to make drinking water more palatable.
- Algae, decomposed organic matter, dissolved gases, or industrial waste most commonly causes odor and taste found in water. There are no set standards for odor and taste, and there are no specific tests for these. The treatment process removes tastes and odors that make water unpalatable to deployed personnel in the field.
- Turbidity is a muddy or unclear condition of water caused by suspended clay, silt, organic and inorganic matter, and microorganisms such as plankton. The turbidity standard was established to improve the efficiency of disinfection by reducing particles to which microorganisms attach.
- Temperature relates to the palatability of the treated water, and to the chlorination and purification of water. Warm water tastes flat, whereas cooling the water makes it more palatable by suppressing odors and tastes. Disinfection takes longer when water is colder, and purification capacity is reduced while using reverse osmosis treatment equipment. The optimal temperature for hydration and palatability is 60 degrees Fahrenheit or 16 degrees Celsius.

CHEMICAL QUALITY

5-4. The chemical quality of water depends on the chemical substances it contains and the effect the water will have on the health of a consumer. The effect of a particular chemical substance determines if a limit is

established for that substance. These substances include TDS, chlorides, sulfates, and other ions. The chemical quality of water involves its hardness, alkalinity, acidity, and corrosiveness. ***Alkalinity* is the content of carbonates, bicarbonates, hydroxides, and occasionally berates, silicates, and phosphates in water.** Alkalinity refers water's capacity to neutralize acids. Chemical substances having an adverse health effect have established standards describing safe levels for consumption. These standards will not be exceeded without medical approval. Specific standards are defined in TB MED 577/NAVMED P-5010-10/AFMAN 48-138_IP. Some of these factors are described below.

Potential Hydrogen (pH)

5-5. The pH is a measure of the acidic or alkaline nature of water. It is technically defined as the negative logarithm of the hydrogen ion concentration. It ranges from zero to fourteen. A pH value of seven is neutral. The pH level directly influences the corrosiveness of the water and the effectiveness of the disinfection process, and the ability of an analyst to detect contaminants. Water with a pH below seven is regarded as acidic, while water with a pH above seven is regarded as alkaline.

Chloride

5-6. Chlorine is used as a disinfecting agent, some of which dissolves to become chloride anions in water. Dehydration is the greatest concern for populations exposed to elevated concentrations of chloride ions. Personnel often reduce consumption due to its poor taste. Chloride also starts to produce laxative effects at concentrations exceeding 600 mg/L. Refer to TB MED 577/NAVMED P-5010-10/AFMAN 48-138_IP for information on how the chloride concentration affects both willingness to consume water and the risk for laxative effects.

Total Dissolved Solids

5-7. Concentrations of TDS above the recommended standards in field water quality could affect the health of personnel. Dehydration, either through rejection of available water or chemically induced diarrhea, degrades personnel performance. The risk of dehydration is directly proportional to the increased levels of TDS. The TDS in water are composed of mineral salts and small amounts of other inorganic and organic substances. TDS may also include chloride, magnesium, sulfate, and other ions and its ingestion in water may result in chemically induced diarrhea. Concentrations of TDS above the recommended standards in field water quality will likely impact the health of Soldiers and Marines and result in degraded performance. The risk of dehydration is directly proportional to the increased levels of TDS caused by water rejection.

Arsenic and Lewisite

5-8. Arsenic may be present in natural water sources in a wide range of concentrations. It can come from either natural or industrial sources. Ingestion of low concentrations of arsenic can cause nausea, vomiting, abdominal pain, or nerve damage. In high doses, it can kill. The standard for arsenic was established to ensure no adverse health effects would occur to degrade personnel performance. Lewisite is an organic trivalent arsenic compound that is a threat agent; ingestion of lewisite can cause gastrointestinal injury and may be lethal.

Cyanide

5-9. Cyanide can be present in natural water from industrial sources such as metal processing, coke production, or mining. Chlorination of water containing hydrogen cyanide results in the formation of cyanogen chloride, a toxic chemical agent. Exposure to cyanide in drinking water can lead to a variety of performance-degrading health effects. Ingestion of low concentrations of cyanide can cause headaches, nausea, or nerve tremors. In high doses, cyanide can result in convulsions, paralysis, respiratory arrest, or death. Once a toxic level has accumulated in the blood, the cyanide exerts its effects rapidly, acting as a chemical asphyxiant. The nervous and respiratory systems are the first to fail. Typical symptoms of acute exposure to cyanide include headache, breathlessness, weakness, palpitation, nausea, giddiness, and tremors.

Lindane

5-10. Lindane is a representative pesticide used worldwide that induces a wide variety of dose-dependent symptoms when ingested in drinking water. It enters water sources from aerial spraying, runoff, or direct application for mosquito control. Wells may be contaminated with lindane when the chemical is spilled around the well during mixing operations or from prolonged exposure to repeated applications in surrounding areas. Symptoms include nausea, vomiting, frontal headache, restlessness, upper abdominal pain, diarrhea, tremors, ataxia, and reflex loss. At high doses, epileptic seizures can occur, followed by major systemic failure and even death.

Magnesium

5-11. The performance-degrading health effects stemming from elevated levels of magnesium ion above the recommended standards for field water supplies center on the risk of dehydration caused by acute laxative action. As the eighth most abundant element on earth, magnesium is the main contributor to water hardness. When ingested in moderate doses, magnesium acts as a laxative. The magnesium standard was established to prevent chemically induced diarrhea, which can degrade personnel performance.

Sulfates

5-12. Similar to magnesium, the degradation of an individual's health from ingestion of sulfate ion levels above recommended standards in field water supplies comes about through the risk of dehydration caused by acute laxative action. Sulfates occur naturally in water as the result of dissolution of sulfur-bearing minerals. Significant concentrations also result from industry sources, such as coal mine drainage, pulp paper mills, tanneries, textile mills, and domestic wastewater. Sulfate is easily recognized by its distinct bad taste in water.

Hardness

5-13. Hardness is chiefly due to the carbonates and sulfates of calcium, iron, and magnesium as discussed earlier. Hardness is generally computed from the amounts of calcium and magnesium in the water and expressed as equivalent calcium carbonate.

CHEMICAL AGENTS

5-14. Chemical agent standards are established to prevent degradation of human performance by low levels of agents. Additional information on chemical agents is contained in TB MED 577/NAVMED P 5010 10/AFMAN 48-138_IP. The M272 kit within the water quality analysis set: purification is used to detect the chemical agents discussed below.

Hydrogen Cyanide

5-15. Hydrogen cyanide is used as a chemical agent and interferes with enzymes that facilitate the use of oxygen by cells. It is also referred to as hydrocyanic acid or prussic acid. Its effects are the same as those described for cyanide and the recommended standards to prevent performance-degrading effects are considered the same.

Mustard

5-16. This agent causes skin blistering and blindness. If ingested, it can cause vomiting and fever as it burns the lining of the stomach and intestines. Sulfur mustard, a blistering agent, is found in any of three formulations: distilled mustard, thickened mustard, or impure mixture containing 60 percent distilled mustard. All of these are slightly soluble in water.

Organophosphorus Nerve Agents

5-17. Concentrations of organophosphorus nerve agents in field water greater than the recommended standards can produce performance-degrading health effects including abdominal cramps, vomiting, diarrhea, and headaches. A sufficiently high level consumed over the course of a seven-day period may even lead to death.

RADIOLOGICAL QUALITY

5-18. Radiological elements may appear in water supplies because of naturally occurring contamination, incorrect disposal of hospital or industrial nuclear wastes, and from the employment of radiological or nuclear weapons. Water treatment specialists and PM personnel are responsible for measuring levels of radioactivity in bulk water supplies. Radiation may cause nausea, vomiting, hair loss, and the degradation of the body's natural defenses to infections. Depending on the severity of contamination, individuals suffering from radiological poisoning can become combat ineffective.

MICROBIOLOGICAL QUALITY

5-19. The microbiological quality of potable water indicates the water's potential to transmit waterborne diseases. Viruses, bacteria, protozoa, or higher organisms cause diseases. Medical personnel will conduct microbiological testing at the point of production initially and at intervals thereafter as directed in TB MED 577/NAVMED P-5010-10/AFMAN 48-138_IP or determined by the local medical authority. PM personnel will test packaged water, major water storage sites, and water provided by a host nation. Coliforms, a general class of bacteria, commonly indicate the potential for disease-causing organisms. Total coliform testing will be performed using the membrane filter technique or by the defined substrate method (such as the commercially available Colilert and Colisure tests). Veterinary personnel should test each lot of bottled or packaged water upon receipt at a central storage facility, supply point, port of entry, or other theater-area issue point. Water provided by a host nation or treated by a host nation should comply with STANAG 2136, STANAG 2629 or other multinational agreements as applicable. TB MED 577/NAVMED P-5010-10/AFMAN 48 138_IP prescribes the procedures and standards for testing frequency and water quality.

DISEASES AND DISINFECTION

5-20. Leaders must ensure that personnel are familiar with the dangers of consuming untreated water. Water is a carrier of many organisms that cause intestinal disease. An entire unit's combat readiness can be degraded by the spread of any of many preventable diseases. An epidemic of one of these diseases among personnel can be more devastating than enemy action and can cause great damage to morale as well as health. Water treatment specialists and the unit field sanitation team must maintain proper disinfectant residuals in potable water. The command surgeon and PM personnel will prescribe the types of water treatment methods used when encountering certain chlorine-resistant organisms. They can recognize or anticipate the presence of these organisms. In addition to native water bacteria, water usually contains a variety of bacteria due to contamination from external sources. These sources include air, soil, and human and animal excreta. The number of bacteria in the air bears a close relation to the quantity of larger suspended particles or dust.

5-21. In emergency situations, or when personnel are cut off from supply lines, the use of iodine tablets can be used to minimize the risk for severe intestinal distress caused by water borne pathogens. See TB MED 577 for more information on the use of iodine tablets and emergency field water standards.

Types of Diseases

5-22. The principal diseases contracted by humans from ingesting contaminated water are diarrheal disorders due to certain Escherichia coli, which produce toxins, salmonellosis, shigellosis, cholera, amebiasis, giardiasis, and several others. Infectious hepatitis and typhoid fever are non-diarrheal infections that can be waterborne. Schistosomiasis and leptospirosis, which are waterborne diseases, principally occur from walking, working, or bathing in contaminated water.

Disinfection

5-23. Disinfection is a water treatment process in which pathogenic (disease producing) organisms are killed, destroyed, or otherwise inactivated (see TB MED 577/NAVMED P-5010-10/AFMAN 48-138_IP). Disinfection is usually the last process and final treatment barrier to microbiological contaminants in water treatment systems. Disinfection involves exposing the water to an oxidant for a specific period to kill or inactivate pathogenic microorganisms that were not removed by the preceding treatment processes. The disinfectant may also oxidize certain chemical contaminants that passed through the previous treatment steps. A secondary purpose for disinfecting drinking water is to provide a measurable disinfectant residual in

storage and distribution systems as a sentinel to post-treatment contamination and to prevent and minimize bio-film growth.

5-24. Water must be disinfected to be considered potable. No other treatment process, or combination of processes, will reliably remove all disease-producing organisms from water. All methods of disinfection must satisfy the following criteria. The disinfectant must—

- Mix uniformly to provide intimate contact with potentially present microbial populations.
- Have a wide range of effectiveness to account for the expected changes in the conditions of treatment or in the characteristics of the water being treated.
- Not be toxic to humans at the concentration levels present in the finished water.
- Have a residual action sufficient to protect the distribution systems from microbiological growths and act as an indicator of recontamination after initial disinfection.
- Be readily measurable in water in the concentrations expected to be effective for disinfection.
- Destroy virtually all microorganisms.
- Be practical to use and maintain.

5-25. Chlorination is used for disinfection of potable water in most cases. TB MED 577/NAVMED P 5010 10/AFMAN 48-138_IP provides detailed information on the responsibilities of PM personnel and the guidelines that are applicable to the measurement of chlorine residual in potable water. The efficiency of chlorine disinfection is affected by the following characteristics:

- Form of chlorine present, the pH of the water, and the contact time.
- Type and density of organisms present and resistance to chlorine.
- Concentration of substances other than disease-producing organisms that exert a chlorine demand.
- Adequate mixing of chlorine and chlorine-demanding substances.
- Adding enough chlorine to produce a chlorine residual.

5-26. Water treatment personnel will add sufficient chlorine to system-treated water to maintain a 2.0 mg/L free-available chlorine residual after a 30-minute contact time at the water treatment area. This is the minimum level required to provide disinfection of treated water. If chlorine supplies are low and there is a need to conserve remaining supplies, the command surgeon may authorize reduced chlorine residuals. Disease-producing organisms, such as Entamoeba histolytica and Giardia lamblia, are resistant to normal chlorine residuals. In areas where these organisms are widespread, the command surgeon may require higher than normal residuals and longer contact times.

Onset of Symptoms

5-27. A waterborne disease rarely produces symptoms in its victims immediately after drinking contaminated water. The incubation period must pass before the victim comes down with the disease. During this incubation period, the disease organisms are growing and multiplying within the host. Therefore, an absence of symptoms for several days after drinking untreated water is no guarantee that the water is safe. The absence of disease among local inhabitants is no assurance of safety because the locals may have developed immunity.

5-28. Waterborne pathogens generally take between one and three days to begin presenting symptoms in infected personnel. This means the expected percentage of the population that will become ill may still be capable of executing responsibilities for up to one to three days after ingesting water containing any of the microorganisms of concern. TB MED 577/NAVMED P-5010-10/AFMAN 48-138_IP contains detailed information on these waterborne diseases that are of concern to the military: diarrhea, cholera, typhoid, amebiasis, giardiasis, cryptosporidiosis, shigellosis, viral hepatitis A, schistosomiasis, leptospirosis, metabolites of algae and related aquatic bacteria, and water-related organisms.

CHEMICAL BIOLOGICAL RADIOLOGICAL AND NUCLEAR CAPABILITY

5-29. Water treatment systems can decontaminate raw water that is contaminated with CBRN agents. The feed-water filters and the reverse osmosis elements remove most CBRN agents; however, safe levels require the use of a CBRN filter. When decontaminating raw water during CBRN missions, the product water is additionally passed through a CBRN filter to assure agent removal. CBRN filters are configured differently for each water treatment system. See equipment technical manuals (TMs) for specific CBRN filter specifications and service life.

GENERAL AND ENVIRONMENTAL SAFETY

5-30. Water treatment specialists must adhere to safety guidelines in equipment TMs to prevent death or severe injury during transportation, installation, operation, and recovery of WSDSs. Environmental stewardship measures apply to water storage, distribution operations, and disposal.

WATER TREATMENT SAFETY

5-31. Operators should review the individual system TM to understand all safety hazards unique to each water treatment system. The following list includes some general safety precautions to observe when operating water treatment systems:

- Properly ground the water treatment system. If a generator is separated from the system, it must be grounded. See the respective generator's TM for grounding specifics.
- Properly block wheels for trailer-mounted systems.
- Serviceable fire extinguishers must be on site and a fire point established.
- All system support legs must be down and in the locked position.
- Operators must wear hearing protection when equipment is in operation.
- Post "NO SMOKING" signs near fuel points and operational areas.
- Do not store chemicals under direct sunlight and always use aprons, gloves, and goggles when handling chemicals.

CONFINED SPACE PERMIT

5-32. To prevent injury and possible death, Army personnel will not enter a permit-required confined space without any approved permit, personal protective clothing, monitoring equipment, or use of isolation or lock out/tag out procedures. Confined spaces include, but are not limited to, boilers, cupolas, degreasers, furnaces, pipelines, pits, pumping stations, septic tanks, sewage digesters, sewers, manholes, silos, storage tanks, utility vaults, vats, tunnels, cells, ducts, or similar type enclosures. See DA Pam 385-10 for further guidance.

ENVIRONMENTAL STEWARDSHIP MEASURES

5-33. Water treatment specialists handle hazardous chemicals and generate hazardous waste when conducting water treatment operations. If not managed with care, these hazardous materials can negatively affect the health of personnel and the environment. The water treatment area should be designed to reduce health risks and prevent pollution whenever possible. Water units and water treatment specialists must make every effort to adhere to the following stewardship principles:

- Apply risk management procedures.
- Comply with local laws, U.S. laws, and DOD and Service environmental policy.
- Maintain a clean and safe work area.
- Properly store chemicals.
- Use required safety equipment when handling hazardous materials and waste.
- Report spills and other violations.
- Turn in hazardous substances.
- Conserve resources.

5-34. Wastewater from water treatment systems can be categorized as brine wastewater, filter backwash wastewater, and membrane cleaning wastewater. Water that has been chlorinated is considered wastewater when being disposed. Each type of wastewater carries different treatment byproducts and therefore poses different individual risks to the environment. Water treatment personnel must consider local environmental laws, Environmental Protection Agency regulations, and appropriate SOPs when executing water support operations. Typically, the theater command or TSC will issue environmental compliance guidelines. The pace of tactical operations (depending on the type or stage of an operation) may limit a unit's ability to adhere to local laws and regulations. Water treatment specialists have a responsibility to advise the chain of command when unit actions do not comply with environmental guidelines. In addition, hazardous material and hazardous waste spills should be reported immediately so that contaminated sites are restored as quickly as possible. Consult TB MED 593 for more information.

Appendix A
Water Support Equipment

This appendix contains information related to the characteristics and capabilities of water support equipment used by the U.S. Army and Marine Corps. It presents equipment sequentially in the following order: water purification systems, storage systems, and distribution systems. This publication's reference section lists the equipment TMs that provide more expansive technical details for the water support equipment presented in this appendix.

ARMY WATER PURIFICATION SYSTEMS

A-1. The Army has different purification systems, each with different capabilities and capacities. Chapter 2 describes which units have each kind of system and the overall purification capacity by unit. The Army water purification systems include the LWP, TWPS, and ROWPU.

125 GPH LIGHTWEIGHT WATER PURIFIER

A-2. The LWP gives sustainment companies and CSCs the ability to produce a safe, reliable supply of potable water to support early entry and highly mobile forces across a range of military operations, entailing everything from humanitarian assistance to limited contingency operations to large-scale combat operations. The LWP provides quality water support to small units and detachments where distribution of bulk water is not feasible, necessary, or practical. The LWP provides water support without committing larger water production assets from the logistics support structure. It tailors water production flow rates to the demands of independent special operations forces, detachments, and units typically engaged in remote site missions. The system includes a potable water dispensing capability that interfaces with military fixed holding tanks. The LWP can purify water from all water classifications including CBRN contaminated water. See TM 10-4610-310-13 for more information.

LWP Characteristics, Capabilities, and Features

A-3. The following are characteristics, capabilities, and features of the LWP:

- Positioned no greater than 50 feet from raw water source.
- Area requirement is 75 feet by 75 feet.
- Produces 125 GPH from freshwater and 75 GPH from saltwater (temperature dependent).
- Uses ultra-filtration and reverse osmosis technology to produce potable water from virtually any raw water source.
- Equipment can be transported in a high mobility multipurpose wheeled vehicle or tricon storage container to the operational site. It can be sling-loaded by helicopter or transported in fixed-wing aircraft.
- Equipment can be unloaded with four to six personnel, set up with two personnel, and operated with at least two personnel.
- Designed for operation between -25°F (-32° C) and 120°F (49°C). A cold weather kit is required for operation at freezing temperatures. The LWP requires an additional three-kilowatt generator and tent for operation in freezing temperatures. At temperatures higher than 120°F, the LWP may not function properly due to possible decrease in power output from the 3-kilowatt tactical quiet generator.

LWP Major Components

A-4. The following are major components of the LWP:

- One 1,000-gallon product tank.
- One 1,000-gallon settling tank.
- 3-kilowatt tactical quiet generator set.
- LWP ultra filtration module.

- LWP high-pressure pump module.
- LWP control module.
- Reverse osmosis element module.
- LWP chemical injection/cleaning module.
- One tricon shipping container used for transport and storage.
- Cold weather kit (additional heated tent required).
- Three CBRN filters.

LWP Consumable Requirements

A-5. Table A-1 identifies LWP consumable requirements (chemicals, filters, and reverse osmosis elements in 5 day/100 operational hour increments). Figure A-1 displays a picture of an operational LWP.

Table A-1. LWP consumable requirements

Estimated Consumable Requirements for 125 GPH LWP (100 Hours of Operation)			
NSN / Part Number	***Nomenclature***	***UI***	***Quantity***
6810-01-527-4039	Acid, Citric, M217, Powder Form, 5.5 Pound Box	CO	1
6850-01-527-4119	Antiscalant, M321, Liquid Form, 32 Ounce Bottle	BT	1
6810-01-527-4028	Bisulfite, Sodium, M323, 980 Gram Container	CO	1
6850-01-527-4116	Cleaner, RO Membrane, M326, High pH, 6 Pound Box	CO	1
6850-01-527-4111	Cleaner, RO Membrane, M326, High pH, 6 Pound Box	CO	1
6850-01-527-4102	Coagulant (Flocculant), M322, Liquid Form, 32 Ounce Bottle	BT	1
6850-00-294-0860	Compound, O-ring, Lubricant, Dow Corning 111	TU	2
(*) PN: 4100334105	Detergent, M334, Powder Form	LB	1
(*) PN 4100333001	Detergent M331, 32 Ounce Bottle, Cleaning Comp. Membrane	BT	1
6840-00-225-0471	Hypochlorite, Calcium (HTH), 6-ounce bottle (Disinfectant)	BT	1
(*) PN: 02450	Hypochlorite, Sodium (Bleach), 24 Ounce Bottle	QT	1
6810-01-527-4074	Solution, Buffer, 15 ppm, 1 Pint (Solution, Standard)	QT	1
6810-01-399-1289	Solution, Buffer, 30,000 ppm, 1 Pint (Solution Standard)	QT	1
6850-01-487-8860	Solution, Calibration, Turbidity Meter	BT	1
6850-01-487-8875	Solution, Calibration, Turbidity Meter	BT	1
6850-01-487-8862	Solution, Cleaning, Turbidity Meter	BT	1
6810-01-528-3706	Solution, Storage, pH Cell	QT	1
NA	Unit Package, chemical, for 140 hours of Operations	PG	1
7920-00-543-6492	Wipes, Disposable (Towel, Paper)	BX	1
Listed are either the new replacement NSNs or part numbers (if there is no replacement NSN). Recommend validation of listed part numbers as they could change.		* NSN listed in technical manual is obsolete.	

BT	bottle	**LWP**	lightweight water purifier	**PG**	package	**RO**	reverse osmosis
BX	box	**LB**	pound	**pH**	potential hydrogen	**TU**	tube
CO	container	**NA**	not applicable	**PN**	part number	**UI**	unit of issue
GPH	gallons per hour	**NSN**	national stock number	**QT**	quart		

Figure A-1. Lightweight water purifier

1,500 GPH TACTICAL WATER PURIFICATION SYSTEM (TWPS)

A-6. The TWPS is a fully contained mobile water purification system capable of purifying, storing and dispensing water meeting military field water standards for long-term consumption. The TWPS is intended to supply potable water to ground, amphibious, and air-mobile units of the U.S. Army and Marine Corps. It can also be used to provide potable water support to civilian agencies or host nations for emergencies, disaster relief, humanitarian efforts, and peacekeeping missions. The TWPS can purify water from all water classifications, to include CBRN-contaminated water. See TM 10-4610-309-10 and USMC TM 10802A-OI/1A Volume 1 for more information on the TWPS.

TWPS Characteristics, Capabilities, and Features

A-7. The following are characteristics, capabilities, and features of the TWPS:

- Positioned no greater than 330 feet from raw water source.
- Area requirement is 75 feet by 100 feet.
- Produces 1,500 GPH from freshwater and 1,200 GPH from saltwater (temperature dependent).
- Uses micro-filtration and reverse osmosis technology to produce potable water from virtually any raw water source.
- Mounted on Army (LHS, PLS) and Marine Corps (medium tactical vehicle replacement-MTVR) transport vehicles. The system frame is International Organization for Standardization (ISO) compatible.
- Equipment can be set-up with three personnel and operated with at least three personnel.
- Designed for operation between -25°F (-32° C) and 120° F (49°C). A cold weather kit is required at freezing temperatures. Temperatures of the source water cannot be greater than 100°F.

TWPS Major Components

A-8. The following are major components of the TWPS:

- Two 3,000-gallon product tanks (additional 9,000 gallons with extended distribution kit).
- One 1,000-gallon microfiltration feed tank.
- One 1,500-gallon cleaning waste tank.
- 60-kilowatt tactical quiet generator.
- Micro filtration system.

- Reverse osmosis system.
- Chemical injection system.
- Standard product water distribution system.
- Extended product water distribution system.
- Ocean intake structure system (OISS) kit.
- Cold weather kit.
- CBRN filter.

TWPS Consumable Requirements

A-9. Table A-2 identifies TWPS consumable requirements (chemicals, filters, and reverse osmosis elements expressed in 5-day/100 operational-hour increments). Figure A-2 displays a picture of an operational TWPS.

Table A-2. TWPS consumable requirements

Estimated Consumable Requirements for 1500 TWPS (100 Hours of Operations)			
NSN	***Nomenclature***	***UI***	***Quantity***
6850-01-528-9972	Antiscalant	BX	1.72
6840-00-238-8115	Calcium Hypochlorite, Disinfectant, 5 lb. bottle	BT	4.225 lbs.
6810-01-527-0515	Citric Acid, 20 lb. Bucket	CO	7 lb.
(*) PN: 803-A-7884	High pH Cleaner, 50 lb.	BX	50
6810-01-527-4590	Sodium Bisulfite, 12 oz. bags, container of 10	BX	12 oz.
The following items provide an additional 100 hours of operation if treating water contaminated by radiological chemical weapon agents:			
6810-01-527-0524	Media, Resin, Package of 6 Bags Ion Exchange Compound	PG	1
6810-01-527-0537	Media, Carbon, Package of 4 Charcoal, Activated	PG	1
6810-01-527-0510	Sodium Hydroxide (Caustic), 1 Gallon Bottle	BX	2
The following items provide an additional 100 hours of operation if operating on a chlorinated water source.			
6810-01-527-4590	Sodium Bisulfite, 12 oz. Bags, Container of 10	BX	1
The following items are additional items required to perform the Preventive Maintenance Checks and Services every 100 hours:			
4310-01-460-7980	Cartridge, purifier	EA	0.33
4310-01-460-3415	Filter element, air	EA	0.11
2910-01-310-6566	Filter, Fuel, Diesel Pump	EA	2
2940-01-310-4495	Filter, Air, Diesel Pump	EA	2
9150-01-421-1427	Lubricating Oil, Engine, 1 qt. bottle, SAE 15W-40	QT	2
4610-01-526-3570	Filter Element, Water (MF)	EA	12
4330-01-454-5502	Filter Element (RO)	EA	10
Listed are either the new replacement NSNs OR part numbers (if there is no replacement NSN). Recommend validation of listed part numbers as they could change.		* NSN listed in technical manual is obsolete.	

BT	bottle	**lb**	pound	**PG**	package	**RO**	reverse osmosis
BX	box	**MF**	microfilter	**pH**	potential hydrogen	**TWPS**	tactical water purification system
CO	container	**NSN**	national stock number	**PN**	part number		
EA	each	**oz**	ounce	**QT**	quart	**UI**	unit of issue

Figure A-2. Tactical water purification system

3,000 GPH Reverse Osmosis Water Purification Unit

A-10. The ROWPU gives sustainment and distribution companies a fully contained mobile water purification system capable of purifying, storing, and dispensing water meeting military field water standards for long-term consumption. A ROWPU is contained in a special 8x8x20-foot ISO container with skid-mounted external components, all mounted on a M871 30-foot trailer. ROWPUs are used to support large-scale military operations and have the highest production capability of all three water purification systems. The ROWPU purifies all classifications of raw water to make potable water, including CBRN-contaminated water. See TM 10-4610-232-13-1 and TM 10-4610-232-13-2 for more information.

ROWPU Characteristics, Capabilities, and Features

A-11. The following are characteristics, capabilities, and features of the ROWPU:

- No greater than 200 feet from raw water source.
- Area requirement is 35 feet by 70 feet.
- Produces 3,000 GPH from freshwater and 2,000 GPH from saltwater (temperature dependent).
- Uses media filtration and reverse osmosis technology to produce potable water from virtually any raw water source.
- Mounted on a 30-foot standard M871 trailer for transport.
- Equipment can be set up with three personnel and operated with at least three personnel.
- Operates in temperatures between -25°F and 110°F (-32°C and 43°C).
- Winterization kit must be used if operating temperature is below 32°F (0°C).
- Temperature of the source water cannot be greater than 110°F (43°C).

ROWPU Major Components

A-12. The following are major components of the ROWPU:

- Three 3,000-gallon product tanks.
- 60-kilowatt tactical (or non-tactical) quiet generator.
- Raw water intake system.
- Multimedia and cartridge filtration system.
- Reverse osmosis system.
- Potable water distribution system.

- Cold weather kit.
- CBRN filter.

ROWPU Consumable Requirements

A-13. Table A-3 identifies ROWPU consumable requirements (chemicals, filters, and reverse osmosis elements expressed in 5-day/100 operational-hour increments). Figure A-3 displays a picture of an operational ROWPU.

Table A-3. ROWPU consumable requirements

Estimated Consumable Requirements for 3,000 GPH ROWPU (100 Hours of Operation)			
NSN / Part Number	***Nomenclature***	***UI***	***Quantity***
PN: ABA-PLUS or PN: C2128 / Cage: 6M644	Eyewash Additive Fungicide	BX	1
(*) PN: KOCHKLEEN901	Cleaner, Membrane Low pH	CO	1
6850-01-369-7897	Coagulant (Polyelectrolyte)	GAL	4
6810-01-359-4918	Sodium Bisulfite	PG	7
6850-01-446-9518	Cleaner, Membrane High pH	CO	1
6810-01-359-5011	Citric Acid	BG	4
6810-01-358-4336	Hypochlorite, Calcium	BG	50
(*) PN: G617318 / CAGE: 53390	Color Reagent	BT	1
6850-01-362-2182	Sequestrant	BT	1
6810-01-200-8010	Sulfamic Acid Reagent	BX	1
6810-01-200-8009	Sulfite Reagent	BX	1
6810-01-358-4381	Sodium Thiosulfate	BT	1
Class IX (Repair Parts)			
4330-01-350-9102	Cartridge filter element 30’’	BX	5
– or –			
4610-01-517-6621	Cartridge filter element 40’’	BX	5
4330-01-350-9101	Air filter element	EA	5
(*) 4330-01-454-5502	RO element (8-inch)	EA	12
Listed are either the new replacement NSNs or part numbers (if there is no replacement NSN). Recommend validation of listed part numbers as they could change.		* NSN listed in TM is obsolete.	

BG	bag	**EA**	each	**PG**	package	**ROWPU**	reverse osmosis water purification system
BT	bottle	**GAL**	gallon	**pH**	potential hydrogen		
BX	box	**GPH**	gallons per hour	**PN**	part number	**UI**	unit of issue
CO	container	**NSN**	national stock number	**RO**	reverse osmosis		

Figure A-3. Reverse osmosis water purification unit

MARINE CORPS WATER PURIFICATION SYSTEMS

A-14. There are three types of water purification systems organic to Marine Corps units: the LWPS, TWPS, and PWPS. Chapter 1 discusses the types of units where these systems reside within the Marine Corps. See respective equipment TMs for detailed information on system specifications and maintenance requirements.

LIGHTWEIGHT WATER PURIFICATION SYSTEM 3.0

A-15. The LWPS 3.0 specifically addresses the need for a portable, lightweight, easily maintained, and all-source-capable water purification unit. The Marine Corps LWPS 3.0 is dissimilar to the Army LWP. The LWPS 3.0 is a reverse osmosis modular unit that is optimally equipped to achieve small-scale, absolute water purification in any field condition. It was developed for use by mobile teams in remote areas or temporary emergency sites. There are three different size capabilities within the LWPS 3.0: LWPS Small (LWPS-S), LWPS Medium (LWPS-M), and LWPS Large (LWPS-L). Its versatile footprint provides for self-contained, potable water support without committing larger water production assets from a support structure. Thus, the LWPS 3.0 can provide sustainable pure water support in austere locations worldwide. The LWPS 3.0 has an easy-access, open-frame design, and all connections are quick-release for easy maintenance and quick element or parts replacement. It is configured in an ultra-lightweight, modular design to ensure portability and adaptive layout. The LWPS 3.0 can purify any source water, even water that has been contaminated by CBRN agents. The LWPS 3.0 consists of 13 components that are connected by hoses and fittings. See TM 10-4610-310-13, TM 10-4610-310-23P and USMC TM 11720A-OI for more information. Figure A-4 on page 84 displays a picture of the LWPS.

LWPS Characteristics, Capabilities, and Features

A-16. The following are characteristics, capabilities, and features of the LWPS:

- Must be positioned within 330 feet of a raw water source.
- Water production capabilities:
  - The LWPS-S can produce 125 gallons of potable water per hour from a fresh water source and 75 gallons per hour from a seawater source.
  - The LWPS-M can produce 225 gallons of potable water per hour from a fresh water source and 135 gallons per hour from a seawater source.
  - The LWPS-L can produce 600 gallons of potable water per hour from a fresh water source and 300 gallons per hour from a seawater source.
- The LWPS 3.0 can be packed into two quadruple containers (known as QUADCONs).

- The LWPS is designed to fit in a M1152 high mobility multipurpose wheeled vehicle or M1102H trailer. It can be sling-loaded by helicopter, tiltrotor aircraft, or transported in fixed-wing aircraft.
- Equipment can be unloaded and set up with two personnel without materials handling equipment. The LWPS is designed to be operated and maintained by one individual.
- The LWPS cold weather kit is employed during cold weather operations (temperatures below 32°F [0ºC]) to prevent water in the LWPS from freezing. The cold weather kit requires a 3-kilowatt generator for operations. To prevent damage to reverse osmosis elements of the LWPS, keep elements away from temperatures greater than 113°F (45°C). To mitigate excessive temperatures, screening can be installed to shade the reverse osmosis elements.

LWPS Major Components

A-17. The following are major components of the LWPS:

- One 3,000-gallon product water tank.
- One 1,000-gallon raw water tank.
- 125 gallons per minute (GPM) raw water pump module.
- Floating intake strainer and OISS.
- Strainer separator module.
- Media/cartridge filter modules.
- High-pressure pump modules.
- Reverse osmosis modules.
- Chlorinator injector.
- Product water pump module.
- Dispenser nozzles.
- Cold weather kit (additional heated tent required).
- CBRN kit.
- CBRN contamination avoidance covers.

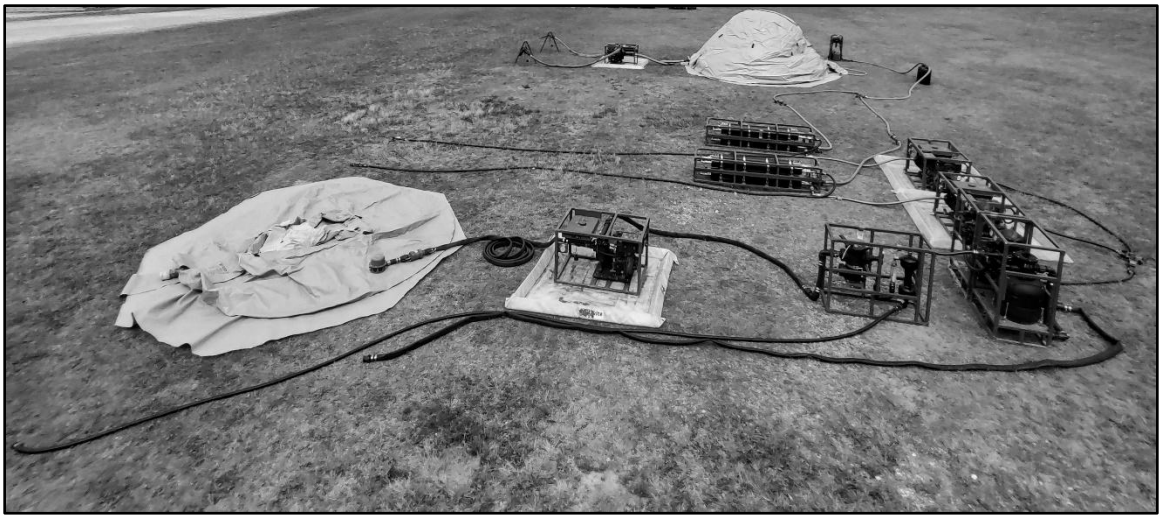

Figure A-4. Lightweight water purification system

MARINE CORPS TACTICAL WATER PURIFICATION SYSTEM (TWPS)

A-18. The Marine Corps TWPS is a skid-mounted system transportable by the medium tactical vehicle replacement truck (MK 23 or MK 25) or by a 5-ton forklift. The system includes the basic TWPS skid, 6,000 gallons of potable water storage capability, and all basic issue items. See TM 10-4610-309-23 for more information. Figure A-5 displays a picture of the Marine Corps TWPS.

A-19. Although the Marine Corps TWPS shares the same internal components and production capability as the Army TWPS discussed previously, there are distinct differences in included components, embarkation requirements, and employment. The Marine Corps TWPS differs in the following ways:

- Powered by a 60-kilowatt generator for operation (shipped separately).
- OISS, cleaning waste tank kit, CBRN kit, and CBRN survivability kit are supplied with the Marine Corps TWPS. Cleaning waste tank kit, cold weather kit, and recirculation tank kit are requisitioned as required by the using unit.
- Skid-mounted forklift support required (not LHS, PLS, or ISO compatible).

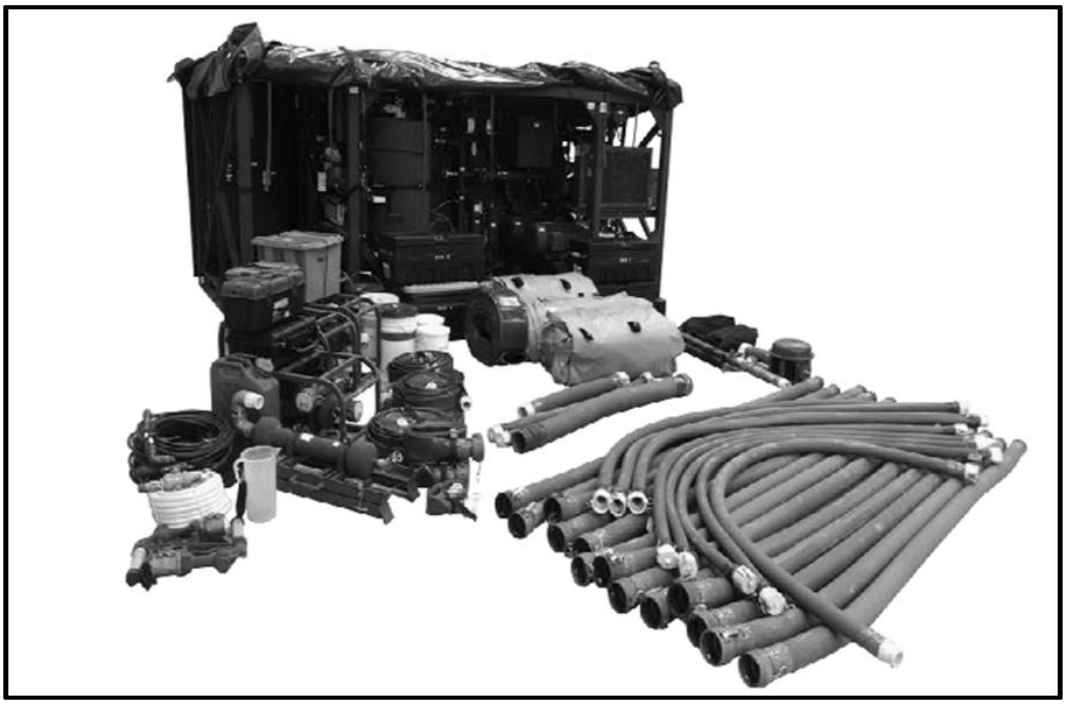

Figure A-5. Marine Corps tactical water purification system

PLATOON WATER PURIFICATION SYSTEMS (PWPS)

A-20. The PWPS specifically addresses the need for a portable, lightweight water purification unit. The PWPS is a self-contained reverse osmosis unit equipped to achieve small-scale water purification in any field condition. Developed for use by highly mobile teams in remote areas or expeditionary environments, it can provide sustainable, pure water support at a minimum rate of 18 GPH from seawater or 22 GPH from freshwater. The PWPS is designed to produce water that meets short-term (<30days) water quality standards. The PWPS is not capable of treating CBRN-contaminated water.

A-21. The PWPS is configured so that four people can transport the system in ultra-lightweight cases. The system consists of a rugged main case and accessory case that weigh 130 pounds each and measure 31.59” long x 22.99” wide x 19.48” high. They can be internally transported in the rear cargo area of the M1167 high mobility multipurpose wheeled vehicle and the lightweight tactical all-terrain vehicle. The system has no transportation limitations for rail, air, sea, or ground. The PWPS can operate on various power sources including generators, hybrid systems, renewable systems, and vehicles. The easy access main case is where all water connections are quick-release for easy maintenance and quick replacement of parts. The accessory case provides hoses, power cords, and spares necessary to operate the system. See TM 13308A-14/1 for more information. Figure A-6 on page 86 displays a picture of the PWPS.

A-22. The PWPS consists of seven major components packed in two cases. The major components include:

- Reverse osmosis system – main case.
- Raw water pump (P1) – main case.
- High-pressure pump (P2) – main case.

- Energy recovery device – main case.
- Lightweight membrane vessels – main case.
- Lightweight filter media – accessory case.
- Disinfection liquid – accessory case.
- 120 VAC to 24 VDC power supply – accessory case.
- Battery power supply – accessory case.
- Water test kit – accessory case.

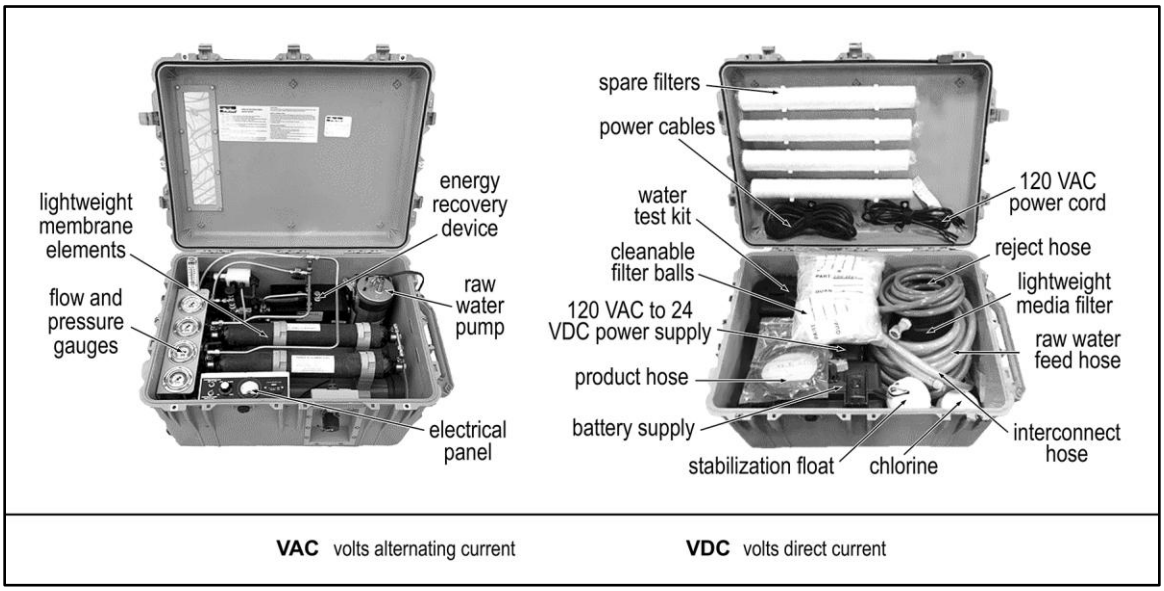

Figure A-6. Platoon water purification system

BULK WATER STORAGE SYSTEMS

A-23. The potable WSDS is the primary system used to store bulk water in a theater of operations. There are two types of WSDSs: a 40,000-gallon WSDS and an 800,000-gallon WSDS. The systems can be configured in many different ways based on storage requirements and available terrain. The Force Provider water storage and distribution subsystem and gray water collection subsystem are expeditionary modular equipment sets that may be fielded to deployed units as part of a prepackaged base camp.

A-24. The WSDS is a modular storage system, which means that any combination of storage tanks may be used collectively or individually. The WSDS can be divided into four basic components: tanks, pumps, hypo chlorinator, and distribution equipment. The 40,000-gallon system is equipped with three 20,000-gallon collapsible fabric tanks (one spare). The 800,000-gallon system is equipped with sixteen 50,000-gallon collapsible fabric tanks. Figure A-7 and Figure A-8 illustrate how the 40,000-gallon and 800,000-gallon WSDSs can be configured. Water can be issued to tank trucks, water trailers, FAWPSS, or small unit containers such as five-gallon cans. Quartermaster water units at echelons above brigade are authorized to order, maintain, and operate WSDSs. WSDSs are assembled by ordering items from DLA or USAMC. See TM 5-4610-228-13 for more information.

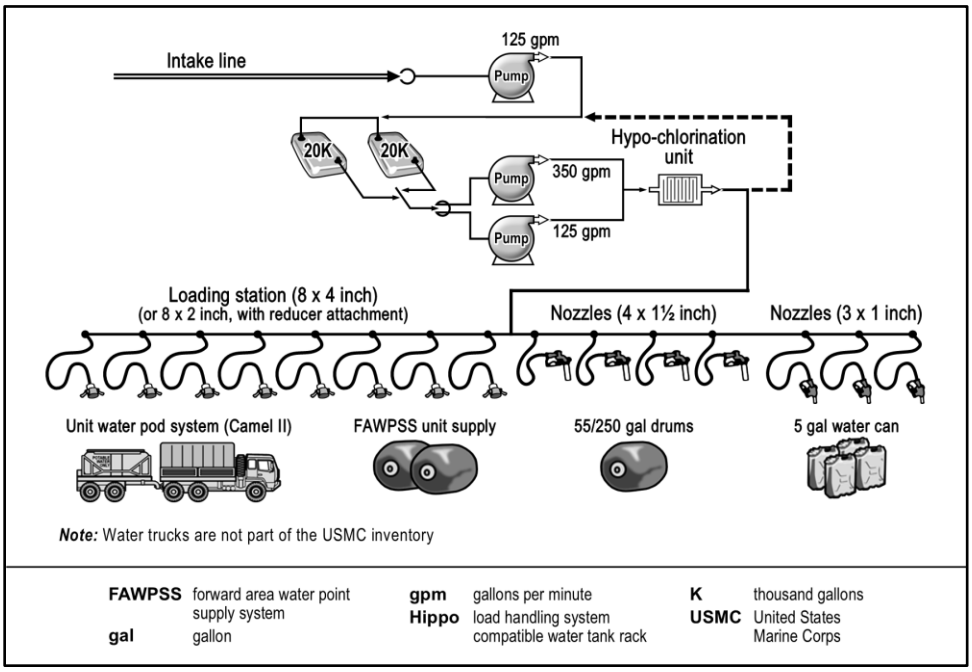

Figure A-7. 40,000-gallon water storage and distribution system

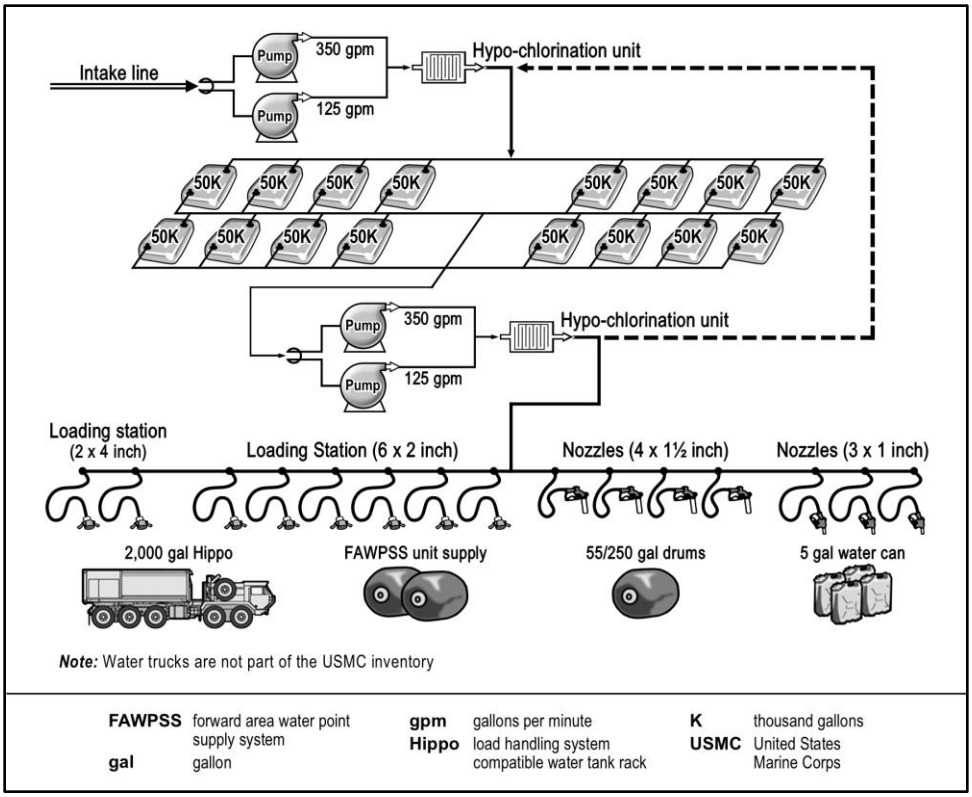

Figure A-8. 800,000-gallon water storage and distribution system

WATER DISTRIBUTION SYSTEMS

A-25. Water distribution systems range from a TWDS to a five-gallon water can. The type of distribution system employed depends on several factors:

- Consumption requirements.
- Water purification and storage capability.
- Location of supported units.
- Distance from potable water source to issue point.
- Environment and weather.
- Physical space and security.
- Other mission variables.

Note. Equipment used to store and distribute potable water should be clearly marked and not used for non-potable water distribution or storage. Thoroughly clean and disinfect any contaminated potable water storage or distribution system before use. See TB MED 577/NAVMED P-5010-10/AFMAN 48-138_IP for more information.

TACTICAL WATER DISTRIBUTION SYSTEM (TWDS)

A-26. A TWDS is employed when large volumes of water must be moved from a water treatment area to a storage or distribution area. TWDS are organic to tactical water distribution (hoseline) detachments that exist in the Army National Guard and Army Reserve. The mission of the tactical water distribution detachment is to distribute potable water via hoseline to corps and theater-level units. Hoseline detachments typically lay, operate, and recover TWDSs in support of a water support company. The system consists of six 600-GPM pumping stations, a 10-mile hoseline segment, two storage assemblies, and two distribution points. The TWDS can transport 720,000 gallons of water within a 24-hour period (20 operational hours). See TM 10-4320-303-13 for more information. Figure A-9 displays a picture of the TWDS.

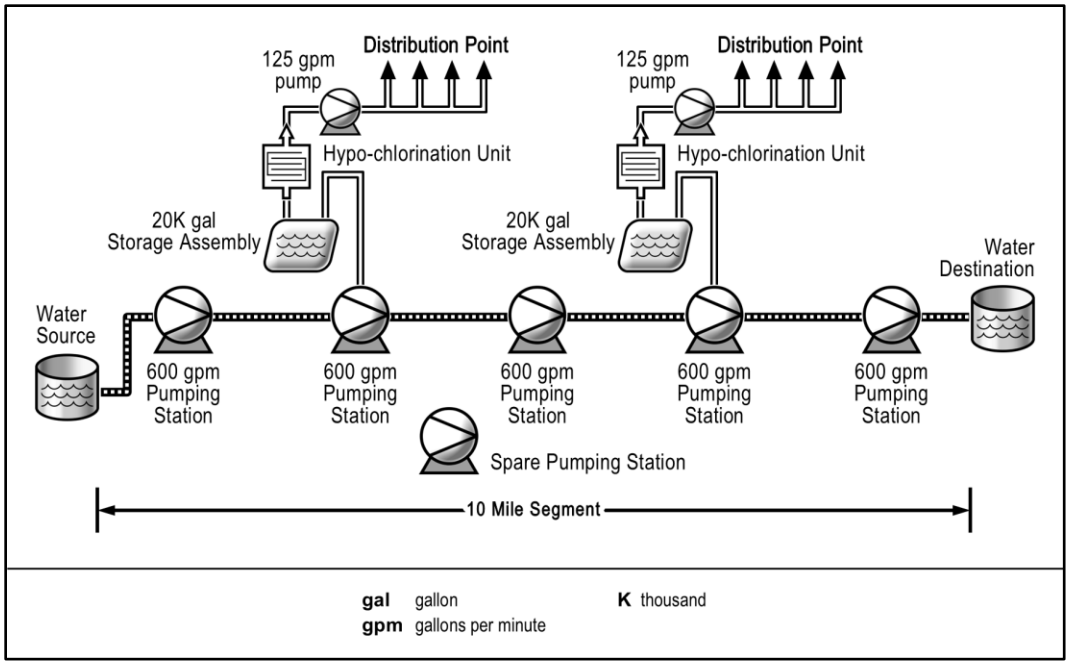

Figure A-9. Tactical water distribution system

MARINE CORPS EXPEDITIONARY WATER DISTRIBUTION SYSTEM

A-27. The Marine Corps EWDS is a small section of the Army TWDS (discussed earlier), which was reconfigured to gain efficiencies and enhance capabilities that are scalable to the operational requirement.

The system is broken down into modular 1.4-mile segment kits. Each EWDS consists of two 600-GPM pumps, one hypochlorinator, connection sets (two, four, and six-inch), and one hose reel system that is mounted on a base assembly. The hose reel system consists of three hose reels containing 1.4 miles of 6-inch by 500-foot hoses. The 20,000-gallon collapsible fabric tanks are stand-alone end items that are employed with the EWDS. If necessary, water can be re-chlorinated using the hypochlorination unit and then dispensed to personnel at distribution points. The EWDS can transport 720,000 gallons of water in a 24-hour period (20 operational hours). A forklift is required to reposition or emplace the hose reel. Figure A-10 displays a picture of the EWDS.

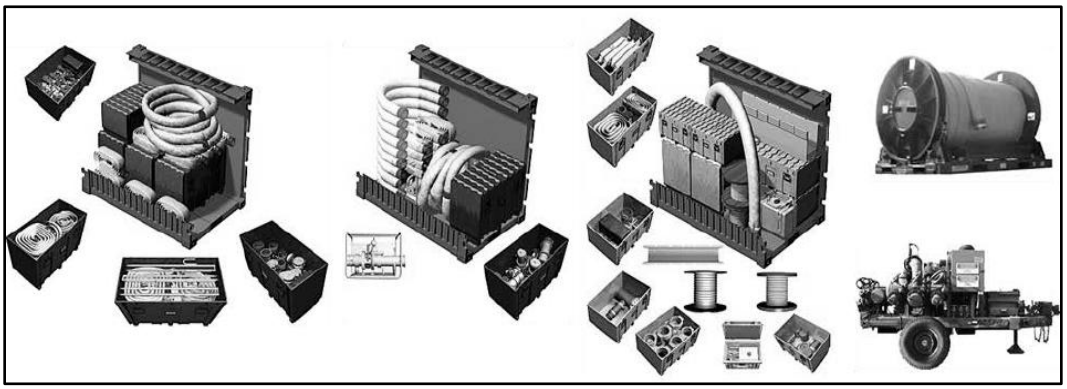

Figure A-10. Expeditionary water distribution system

A-28. Figure A-11 illustrates the design for operational use of the EWDS. See TM 112519A-OR/1A for more information about the EWDS.

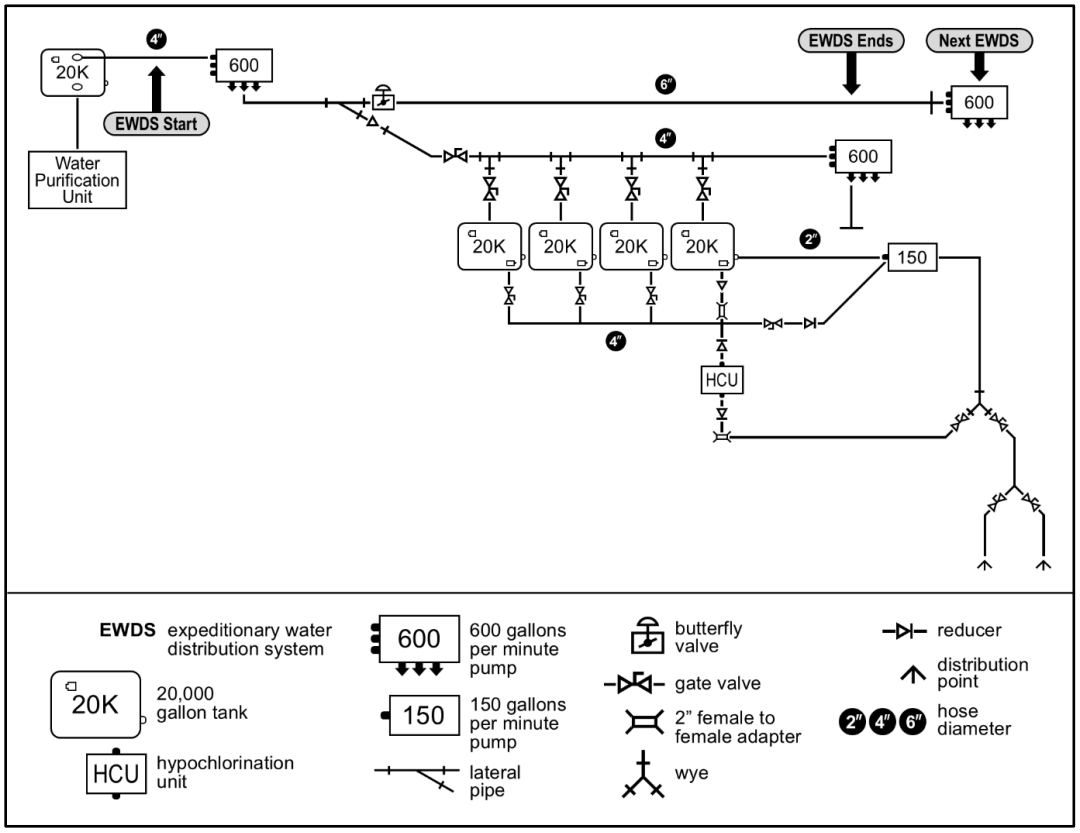

Figure A-11. Design for operational use of the EWDS

FORWARD AREA WATER POINT SUPPLY SYSTEM

A-29. The FAWPSS is a potable water distribution system that can receive, store, and issue potable water. The system consists of four 500-gallon fabric drums, 150-GPM pump unit, hoses, and dispensing nozzles. Two water drums are connected to the system at one time. The pump draws water from the fabric drums and delivers it to four distribution nozzles. Fabric drums can be line-hauled or sling-loaded to forward units. Three fabric drums can fit on a PLS flat rack for movement. See TM 10-4320-346-12&P for more information. Figure A-12 displays a picture of a FAWPSS.

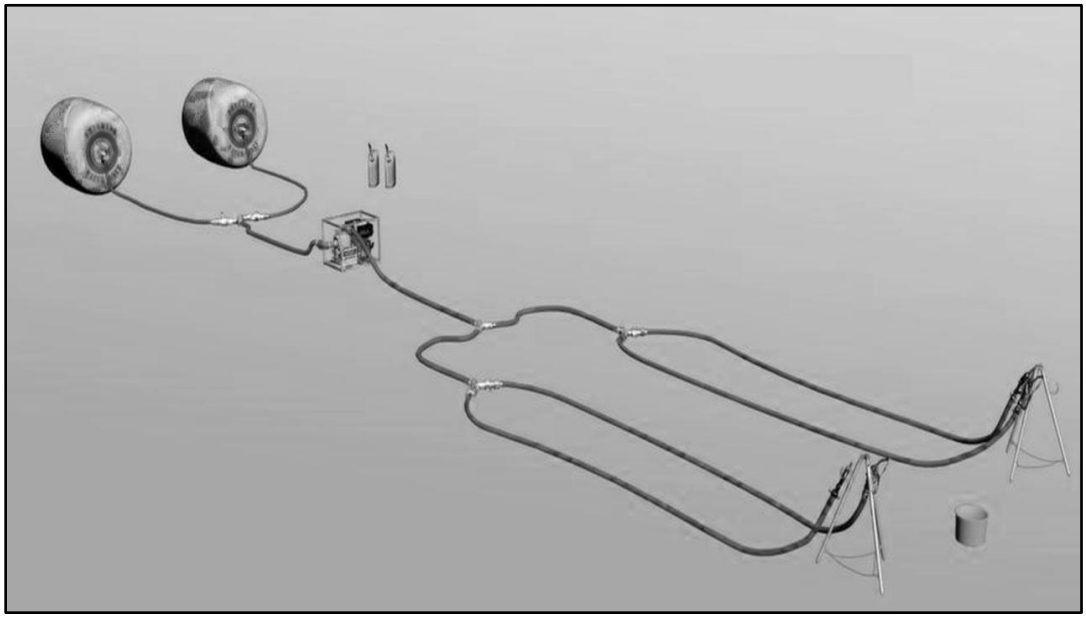

Figure A-12. Forward area water point supply system

2,000 GALLON LOAD HANDLING SYSTEM COMPATIBLE WATER TANK-RACK SYSTEM

A-30. The HIPPO is a mobile hard wall system used to perform bulk and retail potable water distribution and storage. The HIPPO consists of a 2,000-gallon capacity water tank rack with pump, filling station, 70-foot hose reel, and bulk suction and discharge hoses. The filling station is capable of discharging water by either gravity or by using the on-board pump system. It is fully functional whether mounted or dismounted, and is mobile when it is full, partially full, or empty. The HIPPO prevents water from freezing during temperatures as low as 25° F. To prevent freezing of the water and the HIPPO components in temperatures of 32° F and below, operators must apply the freeze prevention steps in accordance with TM 10-5430-244-10 which include warming the housing to 35° F before transportation, using thermal blankets to insulate metal ends, and recirculating the water with the tank heater in the "ON" position. The tank consists of an inner shell, heating blankets, and an outer shell secured by tank banding straps. It is compatible with the heavy expanded mobile tactical truck, LHS truck, PLS truck, and PLS trailer. The LHS truck cannot lift the HIPPO from the ground when fully loaded because the HIPPO weight exceeds the LHS maximum lifting capabilities. Attempting to lift the HIPPO when fully loaded can damage the hydraulics system.

A-31. During operations in arctic regions where temperatures will dip below -25° F, commanders must conduct risk assessments based on mission requirements and plan and implement additional measures to mitigate equipment limitations. These measures may include additional equipment (for example, heating blankets and tents) as established by local SOP and tactics, techniques, and procedures.

A-32. The unit is capable of being transported by highway, rail, marine, and air modes worldwide without disassembly. The HIPPO is conformed dimensionally to the length and width of a standard 20-foot freight container. It can be lifted from the four top corner fittings and four bottom corner fittings. The HIPPO can also be lifted with a forklift of adequate capacity (weight varies when full, partially full, or empty). See TM 10-5430-244-10 for more information. Figure A-13 displays a picture of the HIPPO.

Figure A-13. 2,000-gallon load handling system compatible water tank rack system

SEMI-TRAILER MOUNTED FABRIC TANK

A-33. The 5,000-gallon SMFTs are kept in Army pre-positioned stocks. The fabric tanks are not organic equipment to any quartermaster or transportation units. These must be requisitioned and prepared so that truck companies can haul them on M872 trailers. The SMFT is used to increase a sustainment unit's water distribution capability in a theater of operations. See TM 10-5430-240-13&P more information. Figure A-14 displays a picture of a SMFT.

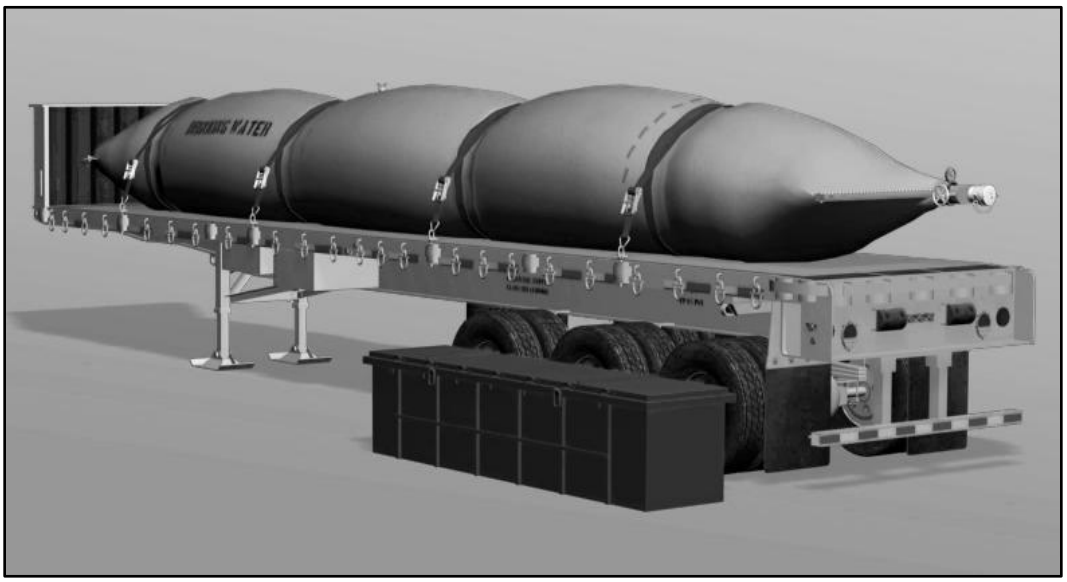

Figure A-14. Semi-trailer mounted fabric tank

UNIT WATER POD SYSTEM

A-34. The unit water pod system (Camel II) is an 800-gallon system that provides modular forces with a capability to receive and issue potable bulk water. The system consists of an 800-gallon capacity baffled water tank with integrated freeze protection mounted on an M1095 medium tactical vehicle trailer. The integrated freeze protection is operational from 25 degrees F (-31.66 degrees C) to 130 degrees F (54.44 degrees C). The Camel II contains a single point dispensing for operation in a cold environment, and six filling positions for filling canteens and five-gallon water cans in temperate operating conditions. See TM

10-2330-402-13&P for detailed operating information about this system. Figure A-15 displays a picture of the Camel II unit water pod system.

Figure A-15. Unit water pod system (Camel II)

MARINE CORPS SIX CONTAINER WATER STORAGE MODULE

A-35. The Marine Corps Water SIXCON Storage Tank Module is a modular system consisting of six tank modules. The six modules attach together to form an ISO/American National Standards Institute configured 8x8x20 foot system. The Water SIXCON Storage Tank Module is a stainless-steel tank encased within the module frame and has a storage capacity of 900 gallons. The water tank is covered with at least one inch of foam insulation to keep stored water from freezing or heating up. It has the ancillary components necessary for interconnecting to other Water SIXCON Storage Tank Modules. The Water SIXCON Storage Tank Module can be used as a mobile water transport asset or as a stationary storage capability. Figure A-16 displays a picture of the Marine Corps Water SIXCON Storage Tank Module.

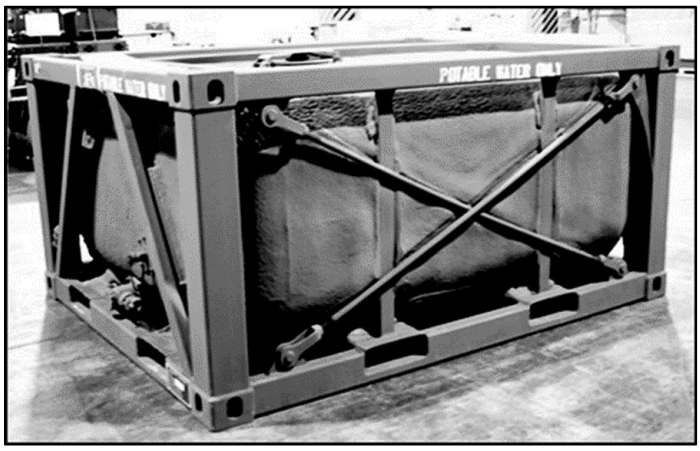

Figure A-16. Marine Corps water six container storage tank module

M149 400-GALLON WATER TRAILER (WATER BUFFALO)

A-36. The M149 400-gallon water trailer (water buffalo) provides modular forces a capability to receive and issue potable bulk water. Medium tactical vehicle and heavy expanded mobile tactical truck variants, as well as other prime movers that have appropriate tow capacity and electrical connectors, can tow the system. See TM 9-2330-267-13&P for more information. Figure A-17 displays a picture of a water buffalo.

Figure A-17. 400-gallon water buffalo

500, 250, AND 55-GALLON COLLAPSIBLE WATER DRUMS

A-37. Collapsible water drums are used for storage and transportation of potable water. Water drums are constructed of water-resistant synthetic rubber impregnated rayon. Water drums can move on all modes of transportation, to include sling load. Components of the 500-gallon and 250-gallon drums are a towing and lifting yoke, tie-down kit, and repair kit. The 55-gallon drum is equipped with D-ring fitted end plates. A tie-down kit and repair kit are components of the 55-gallon drum.

FIVE-GALLON WATER CAN

A-38. The five-gallon water can is part of all unit water distribution capabilities. An individual can move five-gallon water cans over short distances. Water cans are ordered through the supply system using national stock number 7240-00-089-3827. The national stock number for replacement lids is 7240-00-089-7312.

EARLY ENTRY FLUID DISTRIBUTION SYSTEM

A-39. The early entry fluid distribution system is a high-throughput flexible conduit system for the transport of bulk petroleum or water on the modular battlefield. It is a rapidly emplaced conduit system capable of the throughput of 650,000 gallons of raw non-potable water per 20-hour operational day through a trace up to 50 miles long. It enhances the inland petroleum distribution system pipeline and rapidly establishes new, or extends existing, pipeline traces. The early entry fluid distribution system requires little to no engineer support to emplace the conduit or pump stations. Pump stations are fully automated and centrally controlled. Figure A-18 on page 94 is an illustration of an early entry fluid distribution system.

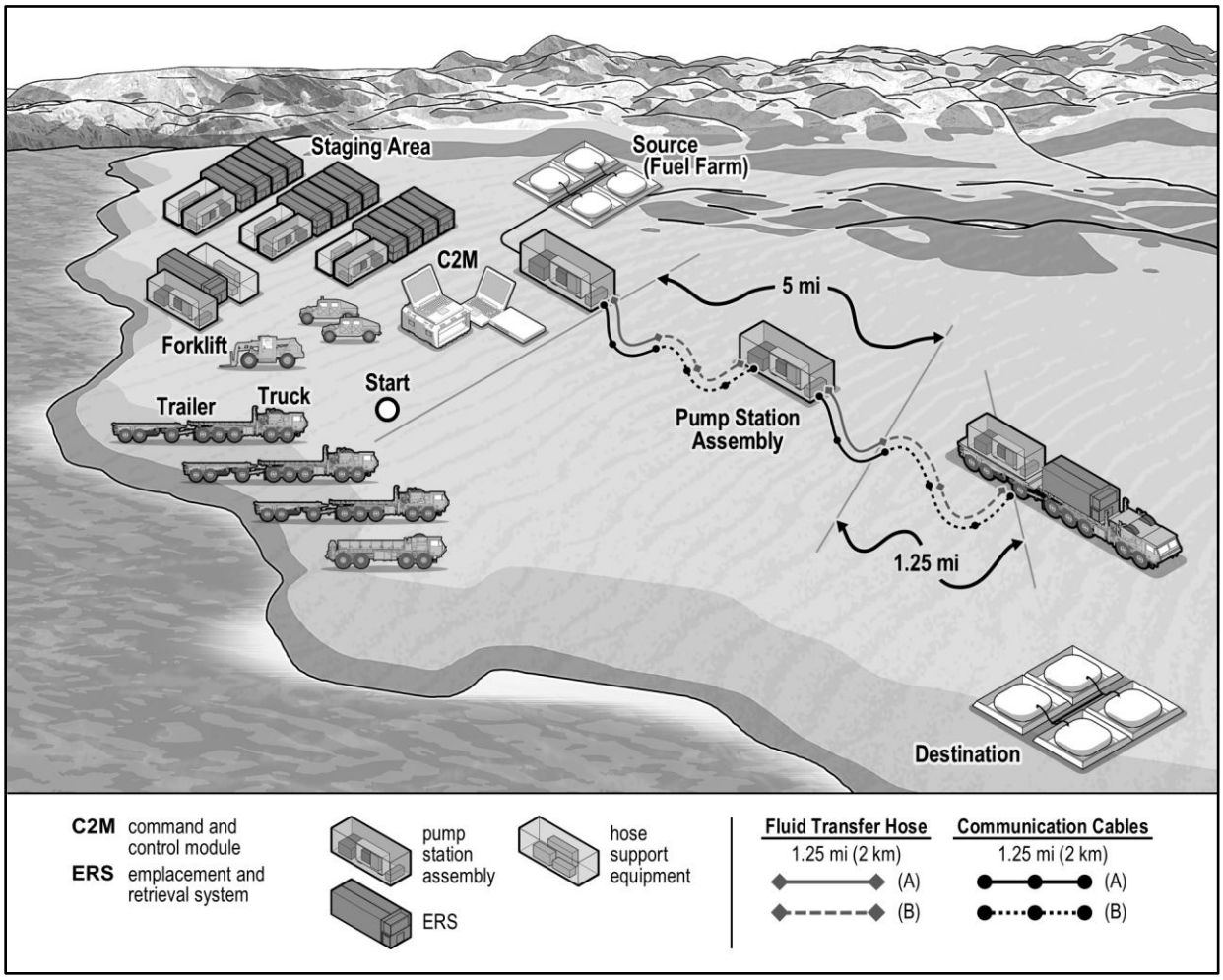

Figure A-18. Early entry fluid distribution system

Appendix B

Water Site Reconnaissance and Development

This appendix provides information for water treatment specialists to consider when developing or improving a single site or multiple sites. As the theater develops, water sites are improved. Special considerations are made for external support and the location and type of water source.

DEPLOYMENT CONSIDERATIONS FOR WATER TREATMENT

B-1. Water treatment specialists should assess the planning considerations presented in table B-1 in preparation for contingency operations. Planners and operators should modify or adjust these considerations based on latest logistics preparation of the battlefield assessments or other unique conditions associated with mission variables.

Table B-1. Equipment and readiness planning checklist

Administrative	
1	Ensure equipment information is annotated in GCSS-Army or GCSS-Marine Corps. (All)
2	Check on status/services of equipment. (All)
3	Ensure operators are licensed on all assigned water equipment.
4	Conduct sustainment training under similar environmental operating conditions (MOS training). For a more interactive and collaborative experience, please visit the U.S Army Quartermaster School 92W virtual training tools website, located in the references of this publication.
5	Annotate MOS training on company training calendar.
6	Select a location and verify the availability of training areas to conduct water support operations.
6a	Identify water source and/or possible engineer requirements.
6b	Conduct site reconnaissance.
6c	Coordinate with local agencies to identify and discharge permit requirements for training area.
7	Obtain point of contact for operational public health.
8	Prepare water reports, logs, and forms to capture historical data.
9	Receive the mission.
9a	Identify water support requirements IAW the Water Planning Guide or table 3-1.
9b	Conduct mission analysis.
9c	Conduct troop leading procedures.
9d	Conduct rehearsal of concept.
9e	Capture lessons learned.
10	Establish or review standard operating procedures (SOPs).
10a	Identify region specific TTPs, challenges, and courses of action.
10b	Revise local SOPs and TTPs to account for operations under extreme conditions as necessary.
11	Identify environmental equipment and training needs specific to the region.
11b	Identify swimmers and non-swimmers. Ensure participation in the unit's water survival training program. Conduct region-specific basic individual survival training.
Chemicals for Water Treatment IAW TB MED 577/NAVMED P-5010-10/AFMAN 48-138_IP	
1	Verify shelf life of water treatment chemicals. (All)
2	Verify prescribed load for all consumable supplies (days of supply given days, hours of operation, raw water quality, and other environmental factors). (All) See Appendix A Water Support Equipment, tables A1 through A-3.
3	Verify amount of water treatment chemicals on hand or needed. (All)

Table B-1. Equipment and readiness planning checklist (*continued*)

Chemicals for Water Treatment IAW TB MED 577/NAVMED P-5010-10/AFMAN 48-138_IP	
4	Identify all national stock numbers for consumable items and verify reorder procedures.
5	Identify and communicate with various distributors.
Water Quality Analysis Set-Purification Kit/ Color test kit/ JCBRAWM	
1	Verify quantity and serviceability of batteries on hand and develop estimated deployment requirements. (All)
2	Verify solutions on hand/ needed/ expiration dates. (All)
3	Verify kits are complete. (All)
4	Verify kit calibration. (All)
5	Verify number of kits on hand/ needed. (All)
6	Verify personal protective equipment on hand for shortages and serviceability.
7	Identify additional kits for emergency purposes.
8	Identify all national stock numbers for consumable items and verify reorder procedures.
9	Identify chemicals that can be shipped.
LWP, LWPS, TWPS, ROWPU, IAW STP 10-92W14-SM-TG & Technical Manuals	
1	Inventory system. (All)
1a	Ensure OISS is on hand for ROWPU and TWPS (the OISS is an essential item for both systems and can be acquired as an additional authorized item).
1b	Ensure equipment is augmented to operate under extreme weather conditions as established by local SOP or TTPs.
2	Conduct preventive maintenance checks and services IAW TM.
2a	Identify all operator and non-operator level faults and deficiencies on a DA Form 5988-E (*Equipment Maintenance and Inspection Worksheet (EGA)*) or DA Form 2404 (*Equipment Inspection and Maintenance Worksheet*). Refer to 91J (Quartermaster and Chemical Equipment Repair Specialist) for field or sustainment-level maintenance if required.
2b	Verify most recent services.
2c	Ensure equipment readiness to include wet testing of purification equipment IAW TM.
3	Ensure equipment has the proper lubricants on hand to operate in extreme weather conditions.
4	Verify hours of operation.
5	Verify frequency of reverse osmosis element replacement. (All)
6	Verify number of reverse osmosis elements on hand and identify shortages.
7	Verify frequency of MF or UF replacement. (All)
8	Verify number of MF or UF replacement. (All)
9	Verify the carbon and resin replacement for CBRN canister. (All)
10	Verify media is on hand and identify shortages. (ROWPU)
11	Verify serviceability of storage tanks. (All)
12	Verify storage tanks on hand and identify shortages.
13	Verify S1 strainers on hand and identify shortages. (TWPS)
14	Verify internal strainers on hand and identify shortages. (All)
15	Verify rupture disc on hand and identify shortages. (All)
16	Verify air pump on hand and identify shortages. (LWP)
17	Verify cold weather kit serviceability. (All)
18	Verify serviceability of containers. (LWP)
19	Verify tool kits on hand and identify shortages. (All)
20	Ensure proper personal protective equipment is on hand.
21	Ensure to acquire life vest as a safety item to emplace the intake water strainer during purification operations.

Table B-1. Equipment and readiness planning checklist (*continued*)

Storage and Distribution Equipment IAW TB MED 577/NAVMED P-5010-10/AFMAN 48-138_IP & Technical Manuals	
1	Check serviceability and cleanliness of bags IAW TB MED 577/NAVMED P-5010-10/AFMAN 48-138_IP. (All)
2	Verify bags on hand and identify shortages.
3	Check serviceability of hoses. (All)
4	Check hoses on hand and identify shortages. (All)
5	Check pump serviceability.
6	Verify pumps on hand and identify shortages.
7	Verify HIPPO inspection dates and forms.
8	Check if the company has a sling load requirement.
9	Inventory expeditionary water distribution system.
10	Verify hose reel and system base serviceability.
Prime Movers IAW Technical Manuals	
1	Verify complete issue of component end items, basic issue items, and required additional authorization list items are on hand.
1a	Check on additional items required to operate during extreme weather based on mission requirements.
1b	Requisition shortages through supply channels as needed.
2	Conduct preventative maintenance checks and services IAW with TM.
2a	Ensure scheduled services are conducted as appropriate based on equipment type and operating conditions.
2b	Identify any special fluids, fuel, and lubricants required to operate equipment under extreme environmental conditions.
2c	Follow up on open requisitions.
3	Reference TM for proper storage and movement of equipment under extreme environmental conditions.
For more information on cold weather operations refer to TM 4-33.31.	

92W	water treatment specialist	**MOS**	military occupational specialty
CBRN	chemical, biological, radiological, and nuclear	**OISS**	ocean intake structure system
GCSS	Global Combat Support System	**ROWPU**	reverse osmosis water purification unit
IAW	in accordance with	**SOP**	standard operating procedure
JCBRAWM	joint chemical, biological, radiological agent water monitor	**STP**	Soldier training publication
		TM	technical manual
LWP	lightweight water purifier	**TTP**	tactics, techniques, and procedures
LWPS	lightweight water purification system	**TWPS**	tactical water purification system
MF	microfiltration	**UF**	ultrafiltration

PETROLEUM REQUIREMENTS

B-2. Calculating the quantity of fuel required to operate a water site requires knowing the hourly rate of fuel consumed for each piece of fuel-consuming equipment at the site along with the planned number of daily operating hours for the equipment to be used. Lubricants and other oils can be estimated based upon the planned operating hours for the equipment and the POL service interval specified in the respective equipment TM. Historical consumption data (if available) and information contained on the equipment data plate can also be helpful. Fuel and POL consumption estimates are submitted to the supply section for ordering and resupply scheduling.

B-3. Water treatment specialists should deploy with enough consumables such as oil, lubricants, fuel filters, and oil filters to sustain operations until resupply can take place. If conducting long-term operations, consider using 55-gallon drums to store fuel. Most generators have an auxiliary connection that can accommodate the

auxiliary hose assembly that connects to the 55-gallon drum fuel assembly adapter. This information is usually found in the generator TM.

CHEMICALS REQUIRED FOR WATER TREATMENT

B-4. When deploying a water treatment system, water treatment specialists typically take enough chemicals to last at least 30 days, based on 20 hours of operation per day (amount of chemicals varies based on mission analysis). Estimating the amount of chemicals required for an operation is more complicated than estimating petroleum consumption. The chemical requirement for an operation is dependent on several variables that the water treatment specialists should understand. These variables include—

- Source water temperature.
- Source water physical and chemical properties.
- Type of water treatment system.
- Estimated hours of operation.
- Quality of water treatment system maintenance.

B-5. Analyzing historical chemical consumption is the most accurate method of determining resupply rates and initial supply quantities. Operators can also use the equipment TM and the Water Planning Guide to estimate chemical requirements. The TM will provide consumption estimates as well as requirements for individual system cleaning, system preservation, and base and batch charges that will help determine accurate forecasts (see the recommended consumable requirements listed in appendix A, tables A-1 through A-3). The Water Planning Guide provides additional information on determining chemical consumption requirements. Water treatment specialists are responsible for estimating chemical requirements and submitting them to the supply section in a timely manner.

WATER SITE DEVELOPMENT

B-6. The development of a water site occurs gradually, so that there is an increase in the production capacity and efficiency over time while water quality is maintained. Orderly development eliminates bottlenecks and other shortcomings that can occur at water sites.

B-7. A water site normally includes a raw water source, water intake point, treatment area, storage area, and issue point. The raw water source is the category of surface or ground water that feeds the intake point. The intake point is the location where raw water is pulled from a water source for treatment. The water purification and treatment location make up the water treatment area. Water is stored before issuance in the designated water storage area. The designated issue point location is for issuing water directly to the end user or issuing water for distribution to the end user.

B-8. If the water intake point requires improvement, this will become a top priority upon occupation of the water site. Table B-2 provides computations that will assist operators in assessing the performance of a water site. Basic arithmetic computations can be used to solve water support problems that are common to water support operations.

Table B-2. Water support formulas

	Conversion or Calculation	*Formula*
1	Volume to weight of water	Weight of water (in pounds) = cubic feet of water x 62.4
1a	Gallons of water to weight of water (in pounds)	Weight of water (in pounds) = Gallons of water x 8.34
2	Vertical feet of water to pounds per square inch	Pounds per square inch = vertical feet of water x 0.43
3	Pounds per square inch to vertical feet of water	Vertical feet of water = pounds per square inch x 2.3
4	Volume to gallons of water	Gallons of water = cubic feet of water x 7.5
5	Gallons of water to cubic feet	Cubic feet = $\frac{\text{gallons of water}}{7.5}$

Table B-2. Water support formulas (*continued*)

	Conversion or Calculation	*Formula*
6	Volume of water tank (rectangular tank)	Volume in cubic feet = L x W x H
7	Volume of water tank (cylindrical tank)	Volume in cubic feet = 3.1415 x r^2 x H
8	Quantity of water flowing in a stream	Quantity of water (in gallons per minute) = 6.4 x (D x W) x (feet per minute)
9	Pounds of chlorine	Pounds of chlorine = $\frac{\text{gallons of water x 8.3 x parts per million}}{1{,}000{,}000}$
10	Gallons of water that can be treated with a given supply of chlorine	Gallons of water = $\frac{\text{pounds of chlorine x 1,000,000}}{\text{8.3 x parts per million}}$
11	Parts per million of chlorine present in treatment tank	Parts per million = $\frac{\text{pounds of chlorine x 1,000,000}}{\text{gallons of water x 8.3}}$
12	Pounds of chlorine to ounces of calcium hypochlorite	Ounces of calcium hypochlorite = pounds of chlorine x 22.9
NOTE: The following units are to be measured in feet for use in the above formulas **D** depth **H** height **L** length **r** radius **W** width		

DRAINAGE

B-9. Wastewater from treatment systems, leakage from tanks, and spillage from distribution facilities keep the water site wet. Roads throughout the water site are constructed with drainage ditches to prevent deterioration due to the combined effects of excessive moisture and heavily laden vehicle traffic. Poor drainage may prevent movement to and from the water site. In addition, during the winter this water may freeze, causing a serious safety hazard for personnel and equipment. Avoid such conditions by having good drainage at each site. Always direct drainage downstream from treatment, storage, and issue activities.

B-10. Water stagnation occurs when water stops flowing. Stagnant water can be a major environmental hazard and allow mosquitoes to reproduce. An increase in mosquito population can lead to an outbreak of dengue. Stagnant water can be dangerous for drinking because it provides a better incubator than running water for many kinds of bacteria and parasites. Human and animal feces, particularly in deserts or other areas with low precipitation, often contaminate stagnant water.

STORAGE FACILITIES

B-11. Storage facilities should be large enough to meet daily peak demands and maintain command-directed DOS for bulk potable water. This will eliminate long waits at the water point by consumers and ensure that sufficient quantities are available for mission requirements. Water treatment personnel install additional fabric tanks to achieve required storage capacity. This is in addition to the tanks issued with water treatment systems. Site considerations for these collapsible fabric bags include level (less than 3-degree slope in 100 yards) and clear terrain. Existing host-nation or occupied-country facilities may be used.

ROAD NETWORKS

B-12. A satisfactory water point must be accessible to vehicles and personnel. A good road network with turnarounds, checkpoints, cover, concealment, and adequate parking is desirable. The load capacity of roads should be sufficient to withstand the heaviest vehicles under all weather conditions. Locate the water site on improved roads, when possible, while considering the security risks.

TURNOUTS AND TURNAROUNDS

B-13. When water points are located along roads, provide facilities for issuing water without interfering with normal traffic. A turnout is created by widening a section of the main road or adding a new one-way road past the water point. See figure B-1 on page 100 for a visual example of a turnout. For large installations, a turnaround is more convenient and efficient, since there is space for water to be distributed to more than one

truck at a time. See figure B-2 for a visual example of a turnaround. The type of road layout used depends on labor and equipment available. Drainage is very important, especially if new construction is required for the turnouts or turnarounds.

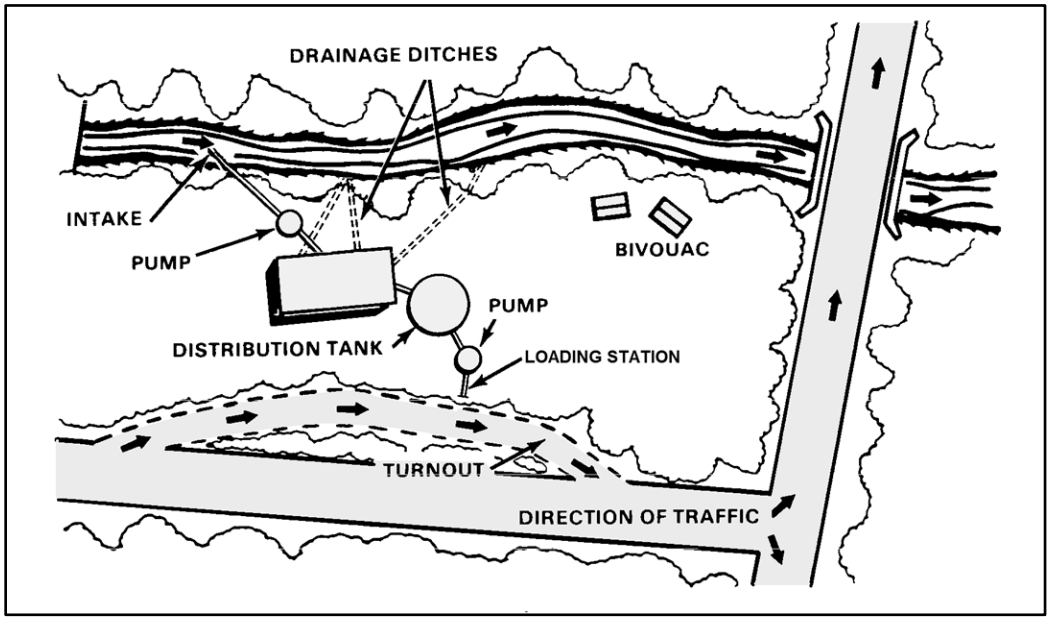

Figure B-1. Turnout

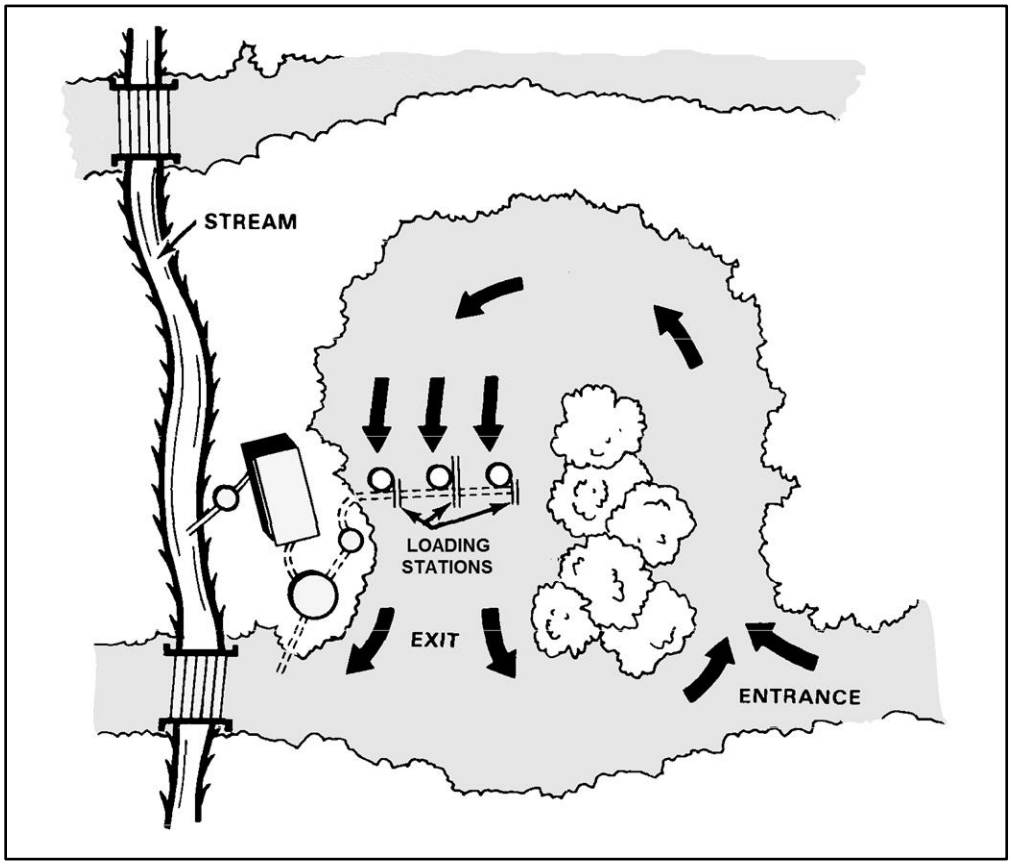

Figure B-2. Turnaround

TRAFFIC SIGNS

B-14. Water treatment personnel should mark the route to the water point with signs. The premade signs will be stored with the water equipment for field use. Considerations for placement of traffic signs include the following:

- Ensure signs are clearly visible to vehicle drivers.
- Ensure signs are placed where there will be little cross-traffic interference, and at all critical points within two miles of the water point.
- Post traffic signs at side roads, crossroads, and forks in the road.
- Place luminous markers on the signs to help direct vehicles during blackouts.

BIVOUAC

B-15. In addition to the other steps involved in developing a water site, water treatment personnel and security forces select a bivouac area. Consider security, facilities, sanitation, and comfort of the troops when selecting a location. Locating water supply personnel near the water site will facilitate the arrangement of shifts and make them readily available in case of emergency. For field sanitation purposes, the bivouac area must be located at least 100 yards downstream or down gradient from the selected water source and water equipment. The latrines and trash collection point should be located 100 yards from the water source and bivouac area. See TC 4-02.3 for additional information.

WATER SOURCE IMPROVEMENT

B-16. The raw water intake point, which pulls from the water source, may need to be improved to meet raw water quantity and quality requirements. Improvement of a water intake point includes all work that increases the quantity of water, improves its quality, or makes it more readily available for treatment.

B-17. All intake hoses or pipes should have an intake screen regardless of how clear the water appears. Protect suction screens from floating debris, which may damage, clog, or pollute them. Proper anchorage of suction lines and screens prevents puncture of kinked lines, damage to the screen, and loss of prime. In addition, water at the intake point should be as clear and deep as possible. The screen on the suction hose must be at least eight inches below the water level and eight inches above the bottom of the source (unless depth of source is too shallow). This helps to keep the screen from becoming clogged with floating debris and prevents loss of prime from air getting into the suction line.

B-18. Suction lift decreases at higher altitudes. In addition, the pumps must create a partial vacuum in the suction line. Therefore, the raw water intake hose must be airtight for the pump to work properly.

DEVELOPMENT OF SURFACE WATER SOURCES

B-19. Surface water is easy to find and easy to develop. Surface water sources can be accessed with military water treatment systems and require minimal engineer support. When using a shallow raw water source, improvements may be required to ensure an adequate intake point when there is insufficient depth to accommodate the purification equipment's floating strainer. There are various techniques for constructing intake points for surface water sources using the purification equipment's ice hole strainer or commercially purchased strainer.

ROCKS AND STAKES

B-20. When streams or shallow lakes are used as a raw water source, rocks and stakes are used to anchor the intake screen at an optimal depth. This will prevent clogging of the screen by a streambed or lakebed and provide enough water overhead to prevent the suction of air into the intake screen. Figure B-3 on page 102 presents a visual example of the stake method.

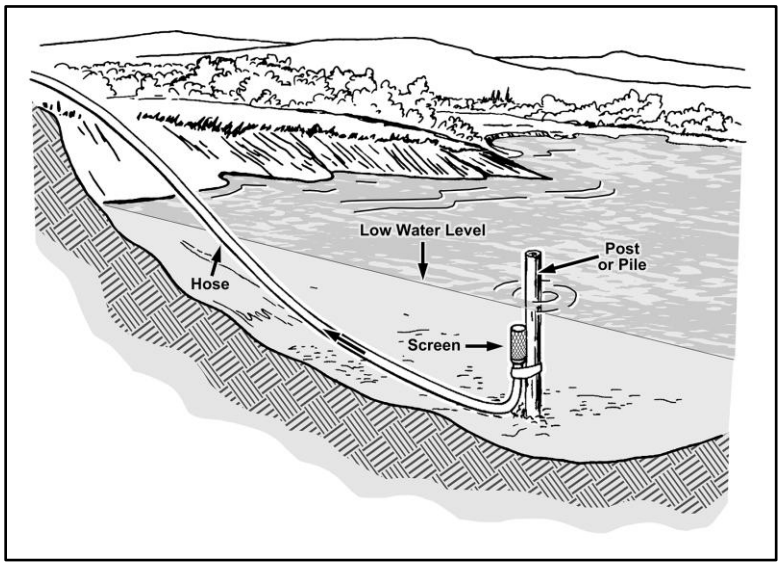

Figure B-3. Stake method

Pits

B-21. When a stream is so shallow that the intake screen is not covered by at least 4 inches of water, but the source must be used, a pit should be dug to increase the depth at a section of the stream. It is necessary to line pits dug in streams with clay or silt bottoms with gravel to maintain their integrity and prevent dirt from entering the water treatment system. The gravel acts as a coarse screen for the water. Another option for enclosing the intake screen is using a bucket to create a shield. Figures B-4 and B-5 show visual examples of each pit method.

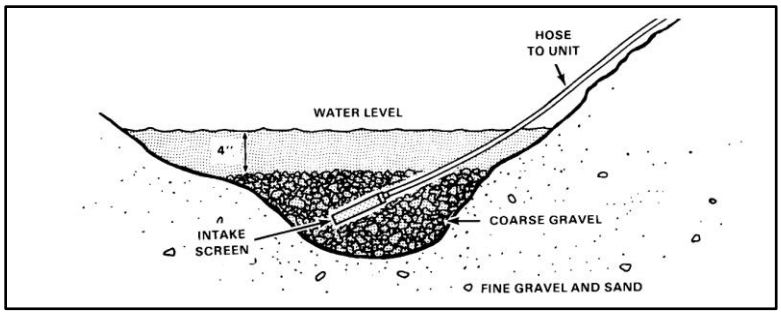

Figure B-4. Gravel pit method

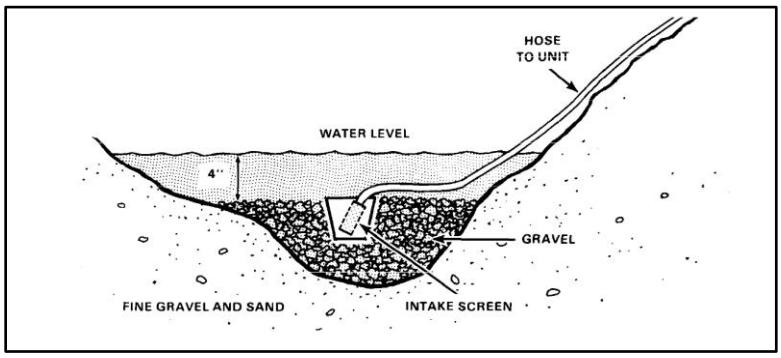

Figure B-5. Gravel pit method with bucket

Dams

B-22. Raise the level of the water in small streams to cover the intake screen by building a dam. In swift flowing streams, construct a wing or baffle to protect the intake screen without impounding the water. Figure B-6 and figure B-7 show visual examples of a dam and baffle dam respectively.

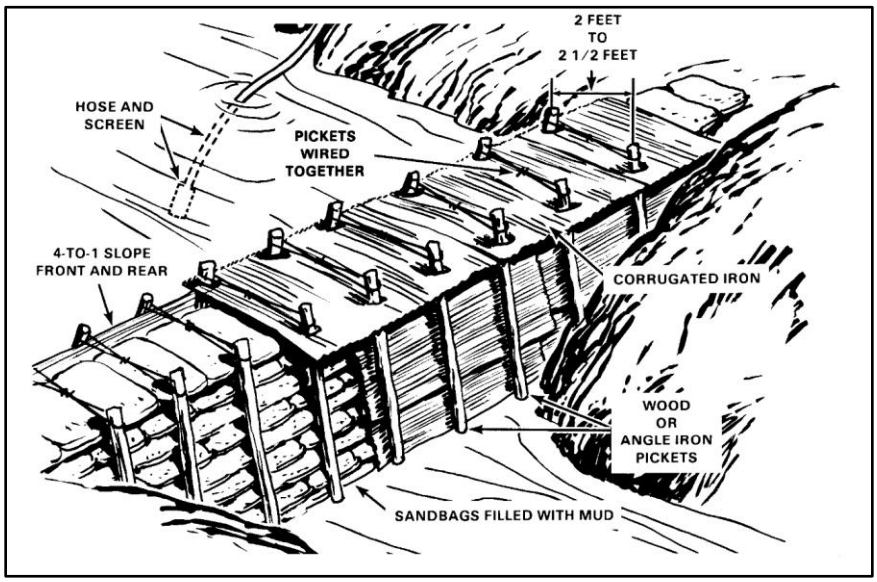

Figure B-6. Improvised dam

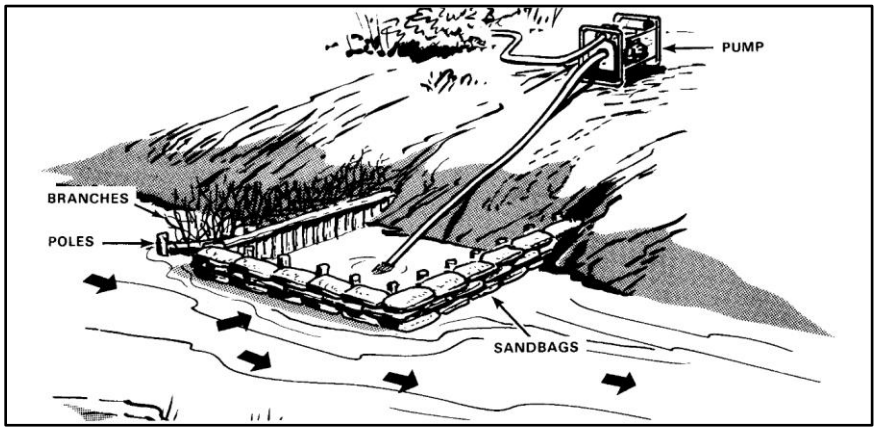

Figure B-7. Baffle dam

Floats

B-23. The chief advantage of a float intake is the ease with which the screen can be adjusted vertically. Floats are especially useful in large streams where the quality of the water varies across its width, or where the water is not deep enough near the banks to cover the intake screen. Considerations for floats include the following:

- Covering the intake with an adequate depth of water by anchoring or stationing the flat at the deep part of the stream.
- Securing the intake hose to the top of the float, allowing enough slack for movement of the float.
- If using support lines to secure the float to the banks, altering the position of the float to correspond to changes in depth by manipulation of the lines.

Galleries

B-24. Engineers can improve the quality of water from muddy streams by digging intake galleries along the bank. To do this, engineers dig a trench along the bank. The trench must be deep enough to allow the water from the stream to seep into it, and to intercept ground water flowing toward the stream. They fill the trench with gravel to keep the sides from collapsing. Then they place the intake screen in the gravel below the waterline. A gallery requires a lot of work, but it may be worth it. It reduces the amount of chemicals needed for coagulation, extends the life of filter cartridges, and extends the filter run between backwashing.

DEVELOPMENT OF GROUND WATER SOURCES

B-25. When surface water supplies are inadequate or unusable, ground water supplies should be developed as a raw water source. Subsurface or ground water is water existing below the earth's surface. About 97 percent of the earth's fresh water (not counting the fresh water frozen in the polar ice caps and glaciers) is located underground in aquifers. In most regions, the ground is saturated with water to a depth that depends largely on the type of rocks and soil, the amount of rainwater, and the topography of the land. Water treatment specialists access ground water through springs or manufactured wells.

B-26. Developing a groundwater supply has many advantages over using surface water. Groundwater is more abundant than surface water, is often cleaner, requires less treatment, and may be easier to protect than surface water supplies. A water well is easy to seal from natural contamination and protect from clandestine contamination. Groundwater supply remains unaffected by short-term drought unless it relies directly on surface sources.

Spring Development

B-27. Water which emerges at the surface naturally with a distinct current is called a spring. When a distinct current is not present, the flow is called a seep. Considerations for spring development include the following:

- Developing a spring by enlarging the outlet of the spring and by building a dam and guiding the water to storage.
- Clearing the spring of all debris, undergrowth, topsoil, loose rocks, and sand to reduce possible pollution.
- Improving springs by building collecting boxes or digging ditches and tunnels.
- Constructing collecting boxes or basins made of wood, tile, or concrete to collect water, which flows from rocks under the force of gravity. The box should be large enough to hold most of the flow.
- Placing collecting boxes below the ground level so that the top is slightly above the surface. Tightly cover the box to prevent contamination and decrease evaporation.
- Designing the inlet to keep out surface drainage and prevent pollution.
- Fencing the area and providing proper drainage.
- Placing a screen on the overflow pipe to keep out insects and small animals. Placing another screen on the intake pipe keeps large suspended particles from being taken in by the raw water pump. To get water from a seep, dig deep narrow ditches leading from the spring to the intake point. Another method is to build pipeline tunnels from the spring to the intake point. (Large-diameter pipe is more suitable for this purpose).
- Trapping water from ditches or pipes by constructing a dam at the intake point.

Manufactured Wells

B-28. Manufactured wells may already exist or may require construction by military well drilling teams. Existing wells must be inspected to determine if quantity and quality requirements can be met. Existing wells may require improvement by engineer personnel before use.

B-29. In the case that an existing well is not present or cannot be improved to achieve raw water requirements, an engineer well drilling unit should construct a new well. Water treatment specialists may receive support from joint engineer partners in the Army, Navy, or Air Force. Army well drilling units are located in the Army National Guard, but OPCON to a joint task force or operational headquarters when forward deployed. Navy well-drilling capabilities are located within Naval Mobile Construction Battalions, also known as

Seabees. The Air Force assigns well drilling units to Rapid Engineer Deployable Heavy Operational Repair Squadron Engineers, also known as RED HORSE.

B-30. NTRP 4-04.2.13/FM 3-34.469/AFMAN 32-1072_IP provides general information for engineer personnel responsible for planning, designing, and drilling wells; focuses on techniques and procedures for installing wells; and includes expedient methods for digging shallow water wells such as hand-dug wells. This publication is available in the Navy Warfare Library.

Types of Manufactured Wells

B-31. Wells are classified into five types according to the method of construction. The five types of wells are discussed below:

- A dug well is one in which the excavation is made using picks, shovels, spades, or digging equipment such as sand buckets or clamshell buckets.
- A bored well is one in which the excavation is made using hand or power augers.
- A driven well is constructed by driving a pointed screen, referred to as a drive point, into the ground. Casings or lengths of pipe are attached to the drive point as it is being driven into the ground.
- A jetted well is one in which the excavation is made by use of a high velocity jet of water. However, in some arctic regions, steam is used for jetting instead of water.
- A drilled well is one in which the excavation is made by either percussion or rotary drills. The excavated material is brought to the surface by means of a boiler, sand pump, suction bucket, hollow drill tool, or hydraulic pressure.

Hydraulics of Wells

B-32. Before a well is pumped, the water level is the same as the level of the surrounding water table. Measure the depth from the ground surface to the water level. This distance is called the static level of the well. Thus, if the water in a well is 25 feet below ground, the static water level is 25 feet. Elevation of the static water level above mean sea level can also describe its position.

Pumping Level

B-33. When a well is pumped, the static water level drops. After several hours of pumping at a constant rate, it stabilizes itself in a lower position. This is called the pumping level or dynamic water level for this rate of pumping.

Drawdown

B-34. The distance the water is lowered by pumping is called drawdown. It is the difference between the static level and the pumping level. The drawdown in the well that results from pumping lowers the water pressure in the well, but the surrounding water-bearing soil retains its original pressure. In response to this difference in pressure, water flows out of the soil into the well.

Intrusion

B-35. Along coastal areas and on islands, there is always the danger of saltwater intrusion into ground water sources. Analysis can accurately determine the degree of salinity. When discovering saltwater intrusion in the ground water supply, take steps to determine the cause. When small amounts of fresh water exist on islands and peninsulas, conservation is usually necessary to prevent saltwater intrusion. The amount of fresh water that can be pumped without intrusion of saltwater depends on local conditions, type of well, rate of pumping, and the rate of recharge of the sand by fresh water.

B-36. In areas of high rainfall, the recharge rate of the sand is usually rapid; but if the rainfall is seasonal, the wells may become dry if water is not rationed during the dry period. A rise in the level of the saltwater occurs if the head (amount) of fresh water is reduced for any reason, such as excessive pumping or a decrease in rainfall. The drawdown in the fresh water level around the well causes a rise in the underlying saltwater. Restrict pumping of any one well according to drawdown, for saltwater will enter the well if drawdown is

maintained greatly below sea level for extended periods. The pumping rate should not exceed the rate of recharge.

Well Yield and Drawdown

B-37. Pumping tests are made on wells to determine the replenishment rate, in addition to other hydraulic characteristics; and to obtain information so that permanent pumping equipment can be skillfully selected and used. Preliminary tests of wells drilled as test holes are sometimes made to compare the yielding ability of different water-bearing formations or different locations in the same formation. Use this information as a basis for selecting the best site for a supply well and the aquifer in which it should be completed. Engineer well drilling units conduct these tests. However, if engineer units do not test the completed well, water treatment specialists must conduct these tests. The measurements that should be made in testing wells include—

- Volume of water pumped per minutes or per hour.
- Depth to the static water level before pumping is started.
- Depth to the pumping level at one or more constant rates of pumping.
- Recovery of the water level after pumping is stopped.
- Length of time the well is pumped at each rate during the testing procedure.

B-38. The specific capacity of a well is its yield per foot of drawdown, usually expressed as GPM per foot of drawdown. The specific capacity is not constant for all values of drawdown, but is nearly so for wells tapping very thick aquifers and wells operating under artesian conditions. Normally, the specific capacity of a well decreases with increased drawdown. The specific capacity indicates the relative yield of a well.

DEVELOPMENT OF SALTWATER SOURCES

B-39. Water support operations may require deployment of water treatment systems to operate on coastal raw water sources. This section provides insight into techniques necessary to overcome operational difficulties associated with water treatment at coastal sites. Factors to be considered in developing saltwater sources are surf action, saltwater corrosion, suspended sand and silt in the water, living organisms, surface oil along beaches, and the rise and fall of the water level with the tide. In arctic regions, another factor is the potential for damage to raw water supply lines from ice floes washing onto the beach. In all regions, locate water treatment systems on sheltered bays, harbors, lagoons, or inlets when possible. Supply raw water by intakes constructed the same as surface intakes for fresh water. Open beaches and small islands are acceptable locations for constructing saltwater wells or offshore intakes.

Saltwater Wells

B-40. Saltwater (beach) wells are preferred to offshore intakes, because they eliminate problems caused by tides, surf, and shallow water close to shore. Driven and jetted wells can be dug to tap brackish or ground saltwater at sandy beach locations. Another advantage of such wells is that they can be constructed behind the shoreline under natural overhead concealment. A disadvantage of saltwater wells is the possibility of hydrogen sulfide content in raw water; under certain conditions, water exiting the pump may have an offensive, rotten egg odor. This is due to the presence of hydrogen sulfide gas. Sulfur-reducing bacteria are the primary producers of large quantities of hydrogen sulfide. These bacteria use sulfur as an energy source, chemically changing natural sulfates in water to hydrogen sulfide. Be aware of the following when dealing with water containing hydrogen sulfide gas:

- The reverse osmosis elements, multimedia filtration, microfiltration, and ultrafiltration will not remove gaseous hydrogen sulfide.
- Hydrogen sulfide in the water will result in pump seal failures, pump impellor corrosion, and eventual corrosion of the piping.
- Adding chlorine to product water containing hydrogen sulfide gas will cause the gas to change from a gas to a solid (free sulfur), causing the water to become cloudy in appearance.

Note. The OISS mentioned below provides ways to mitigate the presence of hydrogen sulfide.

Offshore Intakes

B-41. Offshore intakes are sometimes required due to lack of time, personnel, or equipment required to develop beach wells. In addition, coral formations sometimes prevent construction of beach wells. When constructing offshore intakes, place the raw water intake point directly in the water source. Floating intake strainers must be securely anchored when used at coastal water sites. When environmental conditions prevent use of a floating intake strainer, the OISS may be employed to create a secure offshore intake.

Ocean Intake Structure System

B-42. Water treatment specialists use the OISS to drill wellheads or create offshore intakes during costal operations. The OISS is a component of the TWPS and is compatible with the ROWPU. The OISS is not a component of the ROWPU; it must be purchased separately. The OISS extracts seawater and feeds raw water into a TWPS or ROWPU. Three different methods enable it to match the environmental conditions of a coastal site. The first method is to jet wellheads into the ocean floor using water to fluidize sand and sink the wellpoint for sandy beach areas and optimum performance. Adding risers to the wellpoint aids in extracting water from areas where the water level is greater than four to six feet below the sand level. This is especially important when water levels retreat away from pumping locations during low tide.

B-43. When conditions will not permit jetting wells, two additional methods are available. They are the vertical and horizontal position methods, allowing wellpoint placement directly in the water. The vertical position method consists of wellpoints attached to metal stakes driven into the ocean floor (see figure B-8 on page 115). In the horizontal position method, the wellpoints are laid flat in the water on the ocean floor, with the wellpoints connected together directly to the tees (see figure B-8 on page 115). The vertical and horizontal positions are especially applicable to extracting water from a fresh water source when jetting a well is not possible. Refer to TM 10-4610-309-10 for initial setup and layout of the OISS.

B-44. Perform all installation techniques at maximum low tide. This should eliminate the need to move the wellpoints as tides change. Low tides normally occur twice a day, with one being significantly lower than the other is. Position the OISS during the extreme low tide. The movement of the tide will cause changes in the flow produced by the OISS. At high tides, flows will be the greatest since the water is closer to the pump. During low tide conditions, water will be further from the pump, increasing suction lift.

B-45. To avoid or mitigate hydrogen sulfide gas, water treatment specialists can aerate raw water and treat with citric acid. Aerate the water by spraying it through the air as it is pumped into a 3,000-gallon raw water tank. Aerating the raw water will cause hydrogen sulfide gas to change to a solid (free sulfur). The multimedia filter or microfiltration assembly should remove the sulfur when this water is pumped into the water treatment system. In addition, adding citric acid to the raw water tank reduces the amount of sulfur to a pH level between four and five.

B-46. Vertical wellpoints can be connected and positioned directly in the water, either attached to stakes vertically or laid on the ocean floor in the horizontal position. Replace five-foot risers together with six-inch risers when using the vertical configuration. The two 10-foot sections of suction hose between the wellpoint and the tee are not required; connecting wellpoints directly to the tee is an option. Install wellpoints at low tide, making sure to submerge the wellpoint screen below the low tide waterline. The intake holes at the lower end of the steel jetting pipe must remain submerged, regardless of the tide condition.

B-47. When installing the OISS in the horizontal configuration, position and connect hoses in the same way as the vertical method. The two 10-foot sections of suction hose between the wellpoint and the tee are optional, and the wellpoints connect directly to the tee. However, a major difference between the vertical and horizontal configurations is that the wellpoints lay horizontally, flat on the ocean floor. When laid on the ocean floor, the wellpoint must use the plastic boot or be taped closed. This is because the floating ball check valve in the jetting shoe of the wellpoint operates in the vertical position only. With the horizontal orientation of the wellpoint, there is a possibility of faulty operation of the ball check valve. To aid the horizontal position, dig a trench on the beach where the wellpoint can be securely anchored and monitored. Figure B-8 on page 108 depicts the difference between vertical and horizontal configurations.

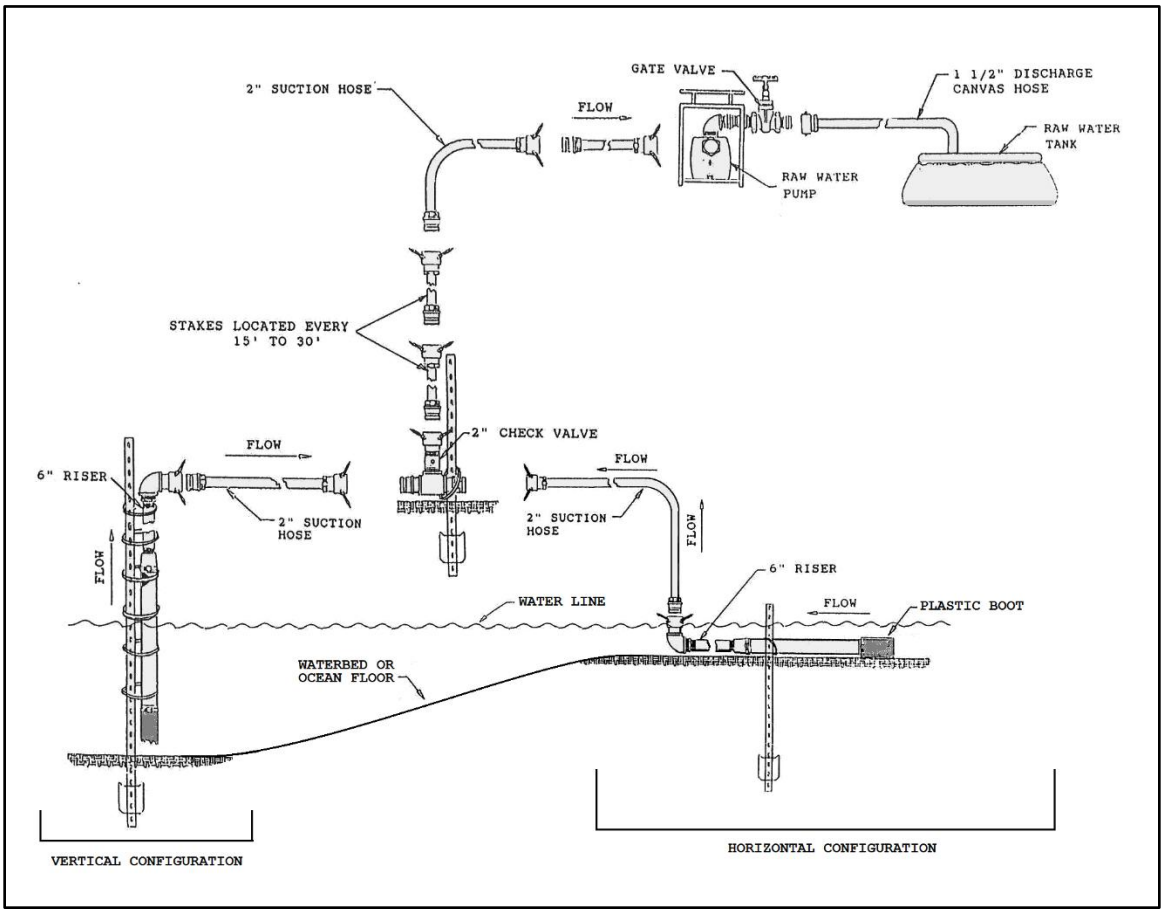

Figure B-8. OISS vertical and horizontal configuration

B-48. There are specific safety considerations to be aware of when operating the OISS. The OISS electrical circuits contain high voltages when in operation. Death on contact may result if personnel fail to observe safety precautions. Do not attempt inspection or maintenance while equipment is connected to a power source. When sand is fluidized during well construction, the area near the hole may become wider or less structurally sound. This could result in loss of solid footing, causing an operator to fall into the hole being drilled. Considerations are made to reduce the risk of drowning in this manner. The OISS operator must be tied off to a safety harness and wear a personal floatation device when drilling wells. There should be at least two personnel present when wellpoints are being drilled.

Appendix C

Arctic and Extreme Cold Weather Considerations

This appendix provides information and guidance on operating in extreme cold weather conditions.

C-1. Extreme cold can significantly slow material handling and maintenance activities by numbing exposed skin, such as the face and hands. Activities that normally require only minutes in temperate weather may require hours in extreme cold. Movement by foot or vehicle over snowy and icy surfaces is slower and poses a high risk of injury to personnel and damage to equipment.

C-2. Subfreezing temperatures result in freezing water in water tanks and water supply lines and exposes equipment to snow and water penetration. Because water expands when frozen and metals and plastics become brittle in subzero temperatures, standing water in equipment may freeze and damage components in areas with close tolerances and no room to expand. Additionally, metals contract at lower temperatures and expand at higher temperatures. Consideration must be given to guard components and equipment against improper clearances that can lead to binding or excessive looseness when exposed to subfreezing temperatures. Always consider the presence of water when working with fuel.

C-3. Commanders and logisticians must make every effort to winterize vehicles and equipment with cold weather lubricants and antifreeze liquids. Equipment should be kept free of snow and water to prevent the effects of freezing water by keeping equipment running or placing impermeable covers on it when in storage or not in use. Material handling and storage personnel should be provided with suitable protective equipment, such as headgear and gloves to minimize the effects of severe cold weather. See TM 4-33.31 for additional information on cold weather maintenance operations, including personnel protective equipment, injury prevention, and materiel handling.

Note. Water freezes at 32°F (0°C). To prevent frostbite, Service members must always wear waterproofed gloves.

C-4. Locating and exploiting water sources convenient for water support operations may be difficult in arctic regions. Engineer support or use of a power auger will be required to drill through the frozen ground. Planners should consider bringing extra hoses and pumps, as the distance to these sources might exceed the equipment's capabilities. Consider the impact of arctic weather conditions on NATO nation equipment such as couplers, adapters, and hoses.

C-5. Operation under conditions of extreme cold may cause equipment problems due to loss of flexibility. Nozzle seals and coupling face seals are especially subject to damage. At -20° F, suction hoses may crack when allowed to crystallize from cold weather exposure or may break if bent when frozen. Collapsible bags and NATO cables may break if forced to open or uncoil without being warmed in a warming tent beforehand.

C-6. Before starting operations, consider warming all bags, hoses, and NATO cables in a warming tent, especially after transporting equipment through arctic temperatures. Frozen water bags become brittle and may rip if unfolded out in the open. Also consider keeping generators for the TWPS and LWP inside the warming tent if not in use so they stay warm enough to operate when needed. See table C-1 on page 110 for equipment considerations during arctic water treatment operations.

Table C-1. Arctic water treatment operations equipment considerations

Equipment	*Temp Range*		*Notes*
	Min	*Max*	
Tactical water purification system (TWPS)	-25°F	120°F	If not done prior to cold weather deployment, notify field maintenance to replace the oil in the raw water diesel engine P-1 with 10W motor oil.
Lightweight water purifier (LWP)	-25°F	120°F	If the ambient temperature is expected to reach 32°F (0°C) or lower, the LWP must be operated in a heated tent and use electric thermal blankets on the hoses where necessary. Set up the LWP within a heated general-purpose medium tent for operation (NSN: 8340-00-482-3963: Vinyl General Purpose Medium Tent, 16′ X 32′). The only items outside and exposed to the weather are the two reject hoses, raw water pump, raw water hoses (grey), and fabric hoses (green) from the raw water pump to the settling tank. The cold weather kit includes thermal blankets to protect these items. The LWP requires an additional three-kilowatt generator to operate the cold weather kit. Refer to TM 10-4610-310-13 for proper operation instructions under unusual conditions.
Platoon Water Purification System (PWPS)	-30°F	120°F	Can be operated in locations with relative humidity between 3 and 95 percent and can purify raw water within the temperature range of -32°F-100°F. If water temperature is greater than 100°F the operator must make adjustments to the equipment.
3K Reverse Osmosis Water Purification Unit (ROWPU)	-25°F	110°F	Freeze up will disrupt operation, perhaps for several days and may cause damage. Do not exceed limitations.
Load Handling System Compatible Water Tank Rack (HIPPO)	-25°F	120°F	When operating below 20°F (-7°C), using only the hose reel for ALL distribution activities is recommended. When the temperature drops to 0°F (-18°C) and below, ONLY the hose reel can be used for distribution activities. Upon completion of any distribution effort, immediately rewind the hose onto the hose reel and allow the heat of the enclosure to warm the hose. DO NOT ALLOW WATER TO REMAIN STANDING IN THE HOSE FOR LONGER THAN ONE MINUTE. When ceasing the distribution of water from the hose reel, allow the HIPPO to recirculate water and immediately drain the water from the hose while rewinding it.
Unit Water Pod System (CAMEL II)	-25°F	130°F	Exercise caution when working on the catwalk and ladders where snow or ice exists.
Trailer, Tank Water (BUFFALO)	-10°F	130°F	If the temperature is expected to fall below 0°F (-18°C), the trailer should be placed in a shelter if possible.
3K & 5K Tank Fabric Collapsible Semi-Trailer Mounted (SMFT)	-25°F	160°F	When using the tank in temperatures below freezing [32°F (0°C)], use caution to prevent water in the tank or in contact with the fluid discharge fittings from freezing. If water freezes, damage may occur to the tank or fittings. Avoid any unnecessary handling of the tank, which might cause cracking or damage to the material.
Forward area water point supply system (FAWPSS)	-50°F	135°F	To prevent frostbite, always wear gloves when handling FAWPSS equipment below freezing temperatures. Water can freeze very quickly and freeze skin to equipment on contact. Prevent water from contacting bare skin by always wearing winter gloves or arctic mittens. Failure to comply may result in injury to personnel.

Table C-1. Arctic water treatment operations equipment considerations (*continued*)

Equipment	*Temp Range*		*Notes*
	Min	*Max*	
125/150 Gallon Per Minute (GPM) Pump	-65°F	125°F	Never leave liquid in the pump casing. Drain the casing immediately through the drain plug. During winter months and cold weather, the liquid could freeze and damage the pump casing. Nozzle seals and coupling face seals are especially subject to damage.
350 Gallon Per Minute (GPM) Pump	-50°F	125°F	Never leave liquid in the pump casing. Drain the casing immediately through the drain plug. During winter months and cold weather, the liquid could freeze and damage the pump casing. Nozzle seals and coupling face seals are especially subject to damage.
600 Gallon Per Minute (GPM) Pump	-65°F	155°F	Cold weather mountain operations require arctic engine oil, a synthetic SW-20 lubricant used for temperatures down to -65°F. Use an ether start kit when the engine will not start normally in cold weather. It injects a mist of liquid ether into the engine air intake system to aid ignition. The kit components are the ether cylinder, control nozzle, and the hose between the nozzle and the air intake.
Collapsible Bags 3K thru 800K	-25°F	140°F	Keep snow and ice from building up on top of the tank or on vent and pipe assembly. Keep snow and ice from couplings to ensure proper assembly and disassembly. In severe cold temperatures (-20°F), sidewalls become brittle and crack.
Tactical Water Distribution Equipment System (TWDS)	32°F	120°F	Is not intended for use at temperatures below 32° F

Note: Due to extended equipment operation requirements, cold weather operations require increased recirculation, equipment maintenance, and fuel usage. Drain water from systems when not operating equipment to prevent freezing of lines. Depending on the temperature, adding icing inhibitors to fuel may be necessary.

Although fuels do not completely freeze, they will be the same temperature as the air. For more information, refer to ATP 3 90.97 and the relevant equipment TMs.

Additional considerations:

– Arctic operations will require setup using available heated space and tents and may affect setup requirements based on the technical manual. Use Army-approved heaters such as Generator Environmental Control Unit Tent (NSN: 6115-01-605-1988) or Improved Army Space heater (IASH) II Tent Heater (NSN: 4520-01-646-3010).

– When using heating tents to conduct water purification and distribution operations, use proper ventilation for exhaust and ensure carbon monoxide detectors are present.

– Additional heated tents may be required for chemical storage, such as Tent Extendable Modular (NSN: 8340-01-185-2628, 20'W X 32'L).

C-7. Tables C-2 and C-3 on page 112 depict cold weather kit information for the HIPPO and Camel II respectively. Refer to the respective equipment TM for specific instructions on installing and operating cold weather kits and detailed item listings for the LWP, TWPS, 3K ROWPU, HIPPO, and Camel II.

Table C-2. Cold weather kit for HIPPO located in TM 10-5430-244-10

Item Name	*National Stock Number (NSN)*	*U/I*	*QTY Required*
Blanket (2X262)106A0296	5970-01-539-1465	EA	2
Blanket (2X262)106A0297	5970-01-539-1472	EA	3

Table C-3. Cold weather kit for Camel II located in TM 10-2330-402-13&P

Item Name	*National Stock Number (NSN)*	*U/I*	*QTY Required*
Cable Gen-Set Adapter 12562526 (19207)	5995-01-610-5586	EA	1
Power Cord, 25 foot 12562527 (19207)	5995-01-619-8263	EA	1

Note. Consult the respective equipment TM for specific instructions on installing and operating cold weather kits.

Appendix D
Logistics Status, Distribution, and Issue Reports

Appendix D provides the framework of LOGSTAT reporting.

D-1. LOGSTAT reports are snapshots taken in time. LOGSTAT reports account for unit-specific requirements based on task organization, equipment density, and assigned mission. LOGSTAT reports include the unit's on-hand stockage levels and what the unit expects to have over the next 24, 48, and 72 hours. The reports must be detailed enough to be useful but simple enough for everyone to prepare and understand. Logistics reporting can easily become an overwhelming task for the staff and result in information overload for the battalion and brigade commanders.

D-2. Reports may be generated in different formats, but every leader must know the status of equipment and on-hand supplies—particularly of ammunition, food, water, and fuel. In order to provide support, BSB commanders, in conjunction with brigade S-4s, use LOGSTAT reports to coordinate with supporting and supported units. The LOGSTAT report enables the higher command and support units to make timely decisions, prioritize, cross-level, and synchronize the distribution of supplies to sustain units at their authorized levels.

D-3. The LOGSTAT report is an internal status report that identifies logistics requirements, provides visibility on critical shortages, allows commanders and staff to forecast future support requirements, projects mission capability, and informs the COP. This report provides planners at the battalion and brigade levels with the information necessary to forecast future support requirements and coordinate appropriate resupply to the maneuver forces. Accurate LOGSTAT reporting is essential for keeping units combat ready. Brigade SOPs establish report formats, reporting times, and analog and digital redundancy requirements. Units must establish and rehearse effective primary, alternate, contingency, and emergency communication plans with task organization changes.

D-4. The commander's preferences and the mission determine what the LOGSTAT report looks like and what it contains. The LOGSTAT report is customizable to the commander's preferences, and units do not necessarily have to produce LOGSTAT reports from a logistics information system. The format presented to the commander should be easy to understand and act on. Providing the commander with too many numbers with percentages and colors is useless. The commander requires an analysis based on the data, along with a recommendation for action.

D-5. The frequency of LOGSTAT reporting varies. Units often complete a LOGSTAT report twice daily, but during periods of increased intensity, the commander may require status updates more frequently. As long as automation is available, LOGSTAT reports relayed in near-real time by automation provide the commander with the most up-to-date data.

D-6. Units that operate supply points must differentiate between internal and external supply stocks and report them accurately. Unit on-hand supplies are those items intended for internal consumption, while supply point items are those items intended for distribution to customers. It is important that the G-4 or S-4, G-3 or S-3, and DMC or SPO account for these two groups of supplies separately to ensure the accuracy of the reports.

D-7. See FM 4-0 for more information on LOGSTAT minimum requirements. Commanders may add unit-specific information based on the type of unit, on-hand equipment, type or phase of an operation, mission, and other requirements.

D-8. Quartermaster units use DD Form 1715-1 to track receipt and distribution of bulk water. The distribution log allows units to calculate how much water is on hand at the end of each day (total received minus total dispatched). The log provides accurate historical data, which aids logistics planners in establishing a water distribution schedule for supported units.

D-9. Water can be issued from storage and distribution systems directly to an end user or by supply point distribution, unit distribution, or throughput distribution to supported units. Water issued from water supply points at all echelons must be tracked closely to accurately capture historical data. Historical data ensures

that unit logistics planners and water treatment specialists are using accurate data to forecast future demand requirements. Use DD Form 1715 to capture historical data.

Appendix E
Water Treatment

This appendix describes the water treatment process in terms of filtration, reverse osmosis, disinfection, and chlorination. The process involves the use of purification equipment and chemicals to convert raw water into potable water that is suitable and safe for human consumption. See appendix A for capabilities and capacities of specific Army and Marine Corps water purification, storage, and distribution equipment.

WATER TREATMENT PROCESSES

E-1. Water treatment specialists use three treatment processes to treat water: filtration, reverse osmosis, and disinfection. The water treatment process affects the physical and chemical characteristics of water. Water treatment specialists must know how to monitor and respond to the presence or absence of these characteristics for proper operation of water treatment, storage, and distribution systems.

E-2. Water treatment systems are used to achieve potability standards for drinking water. Raw water goes through initial filtration to remove large suspended solids. After initial filtration, some circumstances require chemical pretreatment to increase the effectiveness of second stage filters, or to neutralize chlorine existing in source water. Next, water passes through second stage filtration (filter types vary with different water treatment systems) that removes microorganisms and other suspended matter.

E-3. Another chemical injection (antiscalant/sequestrant) occurs after second stage filtration to reduce scaling and corrosion of pipes, pumps, and filters. Next, high-pressure water is forced through reverse osmosis membranes to remove all remaining dissolved solids and contaminants. Finally, water treatment specialists disinfect water to achieve potability standards outlined in TB MED 577/NAVMED P-5010-10/AFMAN 48-138_IP. Purified water is chemically disinfected using calcium hypochlorite to neutralize any remaining pathogens and provide residual disinfectant in storage and distribution systems, which protects against future contaminants. Figure E-1 depicts the basic water treatment process.

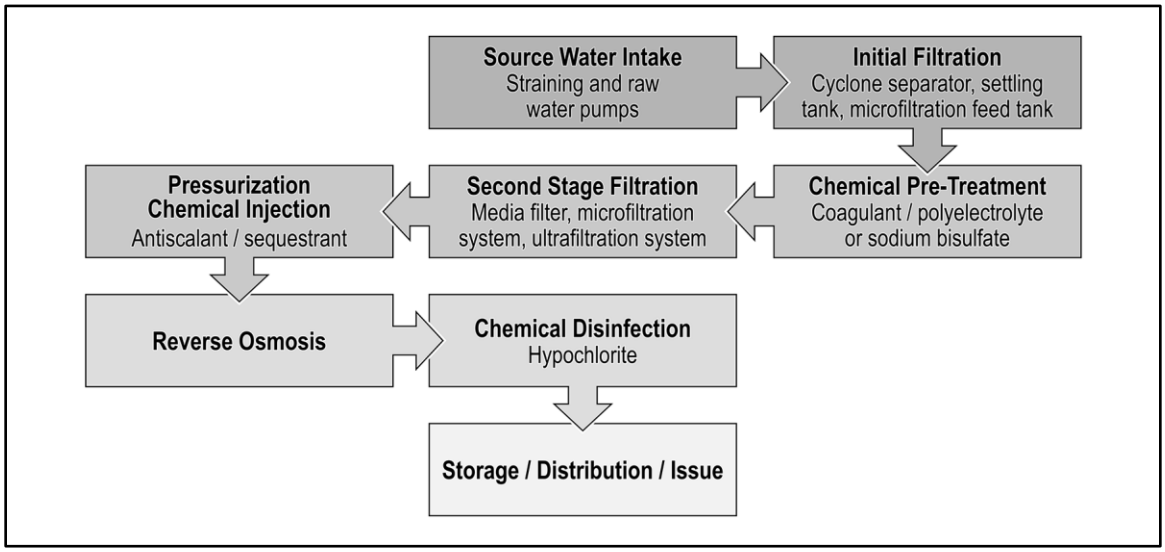

Figure E-1. Water treatment process

FILTRATION

E-4. The filtration process removes suspended solids including silt, dirt, small particles, microorganisms, algae, and plant and animal products before reverse osmosis. The removal of these suspended solids is essential, as the feed water for reverse osmosis must be as free from suspended solids as possible. Individual

water treatment systems use different types of strainers, tanks, and filters to achieve first and second-stage filtration. While each system uses a different filtration process, the outcome will remain the same. The following is an overview of the two stages of filtration.

INITIAL STAGE FILTRATION

E-5. The initial filtration stage removes large suspended solids and debris from raw water that can damage water treatment systems components. The following types of strainers are used in the initial filtration stage prior to feed water entering the main components of water treatment systems:

- Floating inlet strainers (all water treatment systems) are used to hold the raw water intake hose off the bottom of the water source and screen out leaves, sticks, fish, and other large objects.
- Settling tanks (LWP) receive raw water from the floating inlet strainer, which is then filtered through an additional floating strainer inside the settling tank. This allows suspended solids to settle at the bottom of the tank. Feed water is then pulled from the top of the tank into the water treatment system.
- Microfiltration feed tanks (TWPS) receive raw water from the floating inlet strainer, which is then pumped through a cloth mesh filter bag that fits inside the microfiltration feed tank. Feed water is then pulled from below the filter bag into the water treatment system.
- The cyclone separator (TWPS and ROWPU) receives raw water from the floating inlet strainer, and then uses centrifugal water flow action to remove sand and heavy dirt from the raw water. When used in conjunction with a microfiltration feed tank, a cyclone separator is placed between the floating inlet strainer and the microfiltration feed tank.
- Basket strainers (TWPS and ROWPU) catch any remaining suspended solids that leaked through earlier stages of initial filtration to prevent damage to water treatment systems.

SECOND STAGE FILTRATION

E-6. Second stage filtration removes suspended solids before reverse osmosis. This stage of filtration focuses on the removal of turbidity and smaller suspended solids, including microorganisms and bacteria. The types of filtration vary based on the purification system.

ULTRAFILTRATION

E-7. Ultrafiltration is used in the LWP. The ultrafiltration process uses an ultrafiltration membrane cartridge to filter water before reverse osmosis. It is accomplished by means of three ultrafiltration cartridges that can filter suspended particles, bacteria, and microorganisms. The ultrafiltration membranes offer the advantage of prolonged reverse osmosis membrane life due to micron size removal (regardless of the feed water conditions) and elimination of disposable filters.

MICROFILTRATION

E-8. Microfiltration is used in the TWPS. Each filter module contains a filter element that is composed of a bundle of hollow, porous fibers. Microfiltration feed water enters the microfiltration assembly, passes through the porous wall of each fiber, and exits the hollow core of each fiber as filtrate (filtered feed water). The suspended solids and microorganisms that accumulate on the fibers are removed from the fibers during regular automatic backwashes.

MULTIMEDIA AND CARTRIDGE FILTRATION

E-9. Multimedia filters are used in the ROWPU. Water enters the top of the filter through the upper distribution and flows downward through one layer of coarse aggregate filter media and a final layer of very fine garnet sand. Three layers of support gravel support all these layers. A collector picks up the filtered water for discharge. If the suspended solids are too small to be removed by the straining action of the filter media, a coagulant (polyelectrolyte) can be added to the feed water to group suspended solids for more effective removal. With the aid of this chemical, the filter can remove most suspended solids from water and result in a turbidity level within treatment parameters. Water exiting the multimedia filter is then processed by a cartridge filter that further removes suspended solids before the reverse osmosis process.

REVERSE OSMOSIS

E-10. Reverse osmosis is a purification process in which filtered water is pumped against a semipermeable membrane under great pressure. The membrane allows product water to pass through while rejecting the impurities, both suspended and dissolved. Extremely high pressure is used to get a proper volume of water passing through a unit area of membrane. The reverse osmosis process is illustrated in figure E-2.

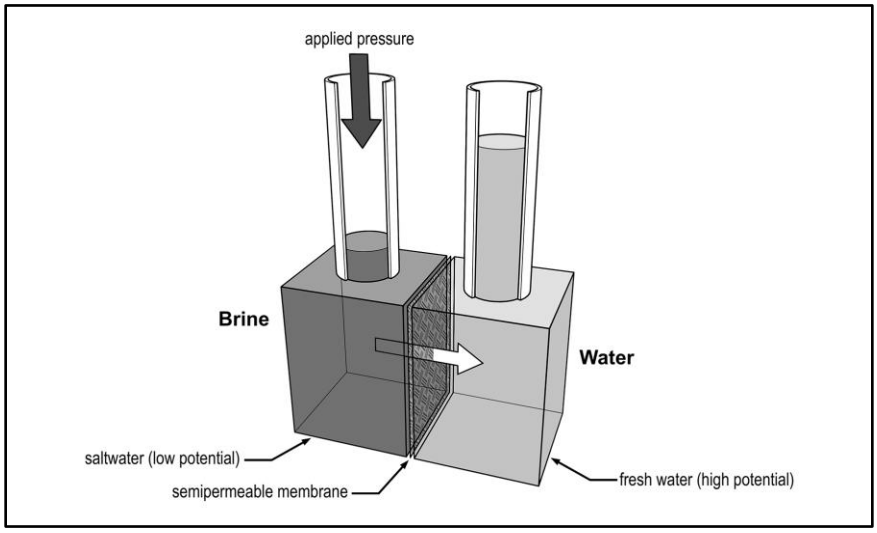

Figure E-2. Reverse osmosis process

E-11. Although reverse osmosis can appear to be similar to a filtration process, there are distinct differences. In filtration, the entire liquid stream flows through the porous filter medium, and there are no changes in chemical potential between the feed and filtrate. In reverse osmosis, the feed flows parallel to the semipermeable membrane, with a fraction of it passing through a given membrane area; dissolved ionic and organic solutes are largely rejected by the membrane. Reverse osmosis removes selenium, copper, iron, manganese, chloride, lindane, radiation, and most color and odor-causing compounds.

E-12. A reverse osmosis element is composed of sheets of membranes in a spirally wound tube as shown in figure E-3 on page 118. Mesh spacers are inserted between layers of the membrane to allow water to flow into and out of the element. See figure E-4 on page 118 for a cutaway view of a partially unwound element. The center of the element is a plastic tube with small holes for the collection of product water. The leaves of membranes and spacers are rolled around the product water collection tube in the center of the element. The structure of the reverse osmosis element allows water to flow from one end of the element to the other without any water passing through the membrane until the osmotic pressure is overcome. When the water has a low osmotic pressure, it flows through the elements and out the brine channel, but not into the product line. Under a lower than osmotic pressure condition, the elements, and consequently the membrane, are doing no work. The water just passes by the membrane rather than through it, so water does not collect in the product water collection tube.

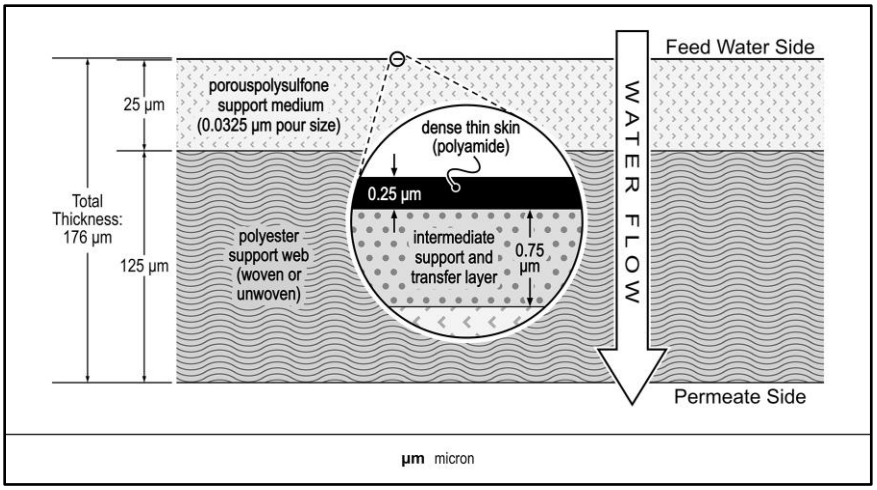

Figure E-3. Reverse osmosis membrane composition

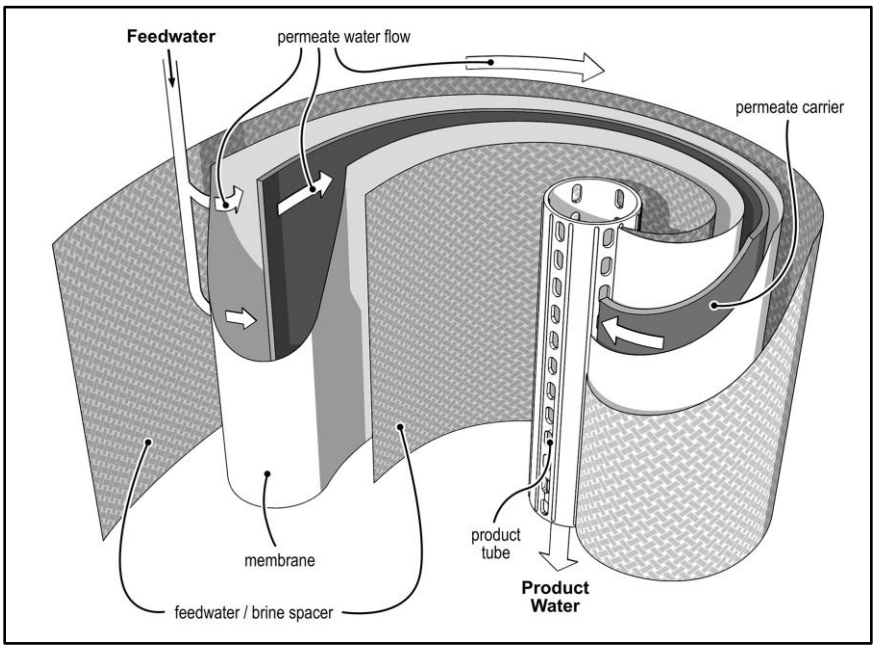

Figure E-4. Spirally wound reverse osmosis membrane assembly

E-13. When the reverse osmosis element is operating normally (at feed pressures in excess of the osmotic pressure), the concentrated brine (waste) stream flows out through the feed-water spaces. The brine collects at the end of the last element and flows out of the pressure vessel. Product water passes through the membrane into the product water channel from both sides. The product water entering the mesh from the membrane flows spirally towards the central product water collection tube. At the very center of the element, the product water channel butts up against the holes in the product water collection tube. Water passes from the product water channel into the product water collection tube and then flows out of the pressure vessels and finally into the product water piping.

E-14. Feed water does not seep into the product water channel because three sides of the leaf of two membrane sheets and the product water channel mesh are glued together. Two of the glued sides become the ends of the element. This isolates the product water channel from feed water on one end of the element, and brine on the opposite end. The third side becomes a seam, which stops feed water from reaching the product water channel without passing through the membrane. The mesh must protrude from this membrane sandwich

on the remaining side so that it can butt up against the product water collection tube. Because of this arrangement, only water that has passed through the membrane can enter the product water channel mesh.

E-15. The wagon-wheel-shaped plastic stems, which extend from the central product water collection tube to the outside perimeter of the element, are called anti-telescoping devices. These stems form a frame that prevents telescoping of the membrane. Telescoping describes the condition when the feed water spacer begins to extend beyond the membrane leaves at the ends of the element. Excessively high-pressure operation of the reverse osmosis purifier is the leading cause of telescoping.

MEMBRANE FOULING AND TREATMENT

E-16. It is imperative to have a thorough understanding of what causes an increase of pressure in reverse osmosis systems and how to reliably monitor and maintain reverse osmosis system performance. Membrane fouling occurs in nearly all reverse osmosis systems and all membranes lose performance quality over time. The frequency of fouling varies from one reverse osmosis unit to the next and depends on several variables, including system recovery rate, reverse osmosis feed water characteristics, and pretreatment. Understanding the basic principles of membrane fouling helps operators more effectively prevent premature fouling.

E-17. Reverse osmosis membranes can be fouled and clogged by bacterial slimes, hard water scale, iron, and silt. The concentrations of the dissolved and suspended solids on the membrane surface affect the performance of the membrane. Higher concentrations mean higher osmotic pressure, which results in a higher tendency for suspended solids to cluster and coat the membrane surface, and higher likelihood of scaling to take place. The following are four categories of membrane foulants that can be classified by physical type and location on the membrane.

Physical Types of Foulants

E-18. Dissolved solids are scale-forming materials such as calcium and barium, which are soluble in feedwater. Foulants of this kind are either cations (positively charged ions) or anions (negatively charged ions), which may complex and precipitate in the brine stream as concentrations increase in reverse osmosis. Examples of precipitated cation or anion compounds include calcium carbonate, calcium sulfate, barium sulfate, and strontium sulfate.

E-19. Suspended solids maintain suspension through a process of repulsion by a double layer of charge. Examples of suspended solids include colloidal forms of metal oxides such as iron, aluminum, or silica. Suspended solids can stabilize particulates, such as carbon fines, that may inadvertently leak during second stage filtration. Suspended solids tend to cluster and settle onto the membrane surface when concentrated past the point of charge-related stability.

E-20. Biological foulants are aerobic and anaerobic living materials such as bacteria, fungus, and algae and the resulting metabolic waste. Such foulants tend to be present in low concentrations but grow into massive quantities that effectively block flow through the membrane surface.

E-21. Non-biological organic foulants are substances that contain carbon-based chemical structures but are not living organisms. Examples of non-biological organic foulants are materials such as oil, plant materials, cationic surfactants, and hydrocarbons.

Foulant Location

E-22. Fouling occurs at various locations within the reverse osmosis system and is directly due to the type of foulant. Colloidal fouling will start at the first element in the first pressure vessel where it collects the small particles that escape the pretreatment system. Because of the higher concentration of dissolved solids, scaling will start in the end element in the last pressure vessel and work its way forward. Biological fouling should occur throughout the system.

FOULING PREVENTION AND PRETREATMENT

E-23. Proper pretreatment produces reverse osmosis feed water of an acceptable quality and minimizes the particles that may carry over to the reverse osmosis membranes. Membrane life is a result of feed water source, pretreatment, frequency of cleaning, and operating conditions. Ineffective or unreliable pretreatment

can adversely affect the reverse osmosis system with problems such as high rates of membrane fouling, excessive cleaning requirements, lower recovery rates, high operating pressure, reduced membrane life, and poor-quality product water. Each of these factors contributes to higher operational costs and lower productivity. Operators and supervisors must understand reverse osmosis fouling prevention and pretreatment in order to maximize membrane life and water production. An efficient operation should yield a five-year life span for membranes.

Chemical Treatment for Water Filtration

E-24. Operators, when required, will monitor the proper use of all chemicals. For systems with a multimedia filter, add coagulant to the influent stream before it reaches the filter and adjust periodically as required to optimize the polymer's effectiveness. An ***influent*** **is water flowing into a reservoir, basin, or treatment operation**. This will flocculate the colloidal material and provide consistent removal of solids in the multimedia filter. It will also provide a quality feed to the cartridge filter, which removes the smaller particles. As these filters become clogged, they will have to be serviced. The desired turbidity of the membrane feed water is one nephelometric turbidity unit or less. Systems using ultrafiltration (LWP) and microfiltration (TWPS) usually do not require the use of a coagulant because of their ability to remove most particles and microorganisms. For the LWP, the use of a coagulant is required if raw water turbidity is greater than 150 nephelometric turbidity units.

E-25. Antiscalants must be used to solubilize or disperse foulants and scale-forming compounds. Sodium hexametaphosphate is an antiscalant and should be used to inhibit the formation of scale forming compounds. It is injected in the raw water to prevent scaling of the system caused by calcium carbonate. Citric acid can be used to dissolve calcium carbonate. It is injected to prevent calcium carbonate deposits that may build on the reverse osmosis elements by maintaining a lower pH in the feed water.

Rinses and Preservations

E-26. Supervisors must stress the importance of performing rinses and preservations. Interruption or periodic shutdown of water treatment operations will require the rinsing of membranes with permeate water. The objective is to minimize the concentration of salts in membranes while there is no flow.

E-27. Particulate foulants should be rinsed before shutdown to prevent settling onto the membrane surface, which results in severe and often irreversibly fouled membranes. If the membranes are expected to remain idle for a longer period, an appropriate preservative should be used to inhibit biological growth. Bacteria can grow through reverse osmosis membranes leading to bacteria growth in post-filter areas.

Reverse Osmosis Cleaning Tips

E-28. The fouling or scaling of elements typically consists of a combination of foulants and scalants. Membrane manufacturers typically recommend alkaline cleaning as the first cleaning step. Acid cleaning should be applied as the first cleaning step only if it is known that only scaling is present on the membrane elements. Acid cleaners typically react with silica, organics, and biofilm present on the membrane surface that may cause a further decline in membrane performance. Sometimes, an alkaline cleaning may restore a decline that was caused by the acid cleaner, but often an extreme cleaning will be necessary. If the reverse osmosis system suffers from colloidal, organic fouling, or biofouling in combination with scaling, then a two-step cleaning program will be required, consisting of a high pH alkaline cleaning followed by a low pH acid cleaning. The acid cleaning may be performed when the alkaline cleaning has effectively removed the organic fouling, colloidal fouling, and biofouling. Refer to the appropriate water treatment system TM for specific cleaning procedures.

CHEMICAL DISINFECTION

E-29. Disinfection is the final step of the purification process, and the result is potable water. Disinfection is achieved by adding disinfecting agents. Chlorination is the most common variety of disinfection.

DISINFECTING AGENTS

E-30. The purpose of a disinfecting agent is to kill or otherwise eliminate disease-causing organisms from the water to achieve potability. Disinfecting agents differ in stability, hazardousness, and reaction time and are differently affected by the condition of the water before treatment.

Chlorine

E-31. Chlorine is the disinfectant agent usually specified for military use. Chlorine is added in the form of hypochlorite salts. Presently, this is the one widely accepted agent that destroys organisms in water; it leaves an easily detectable residual that serves as a trace element. The sudden disappearance of chlorine residual signals there is a potential contamination in the system. No other available disinfectant is as acceptable or adaptable for potable water treatment operations as chlorine. A major disadvantage is that chlorine reacts with certain organic compounds to form disinfection byproducts, some of which are known carcinogens.

E-32. The most important variables in the effectiveness of chlorine disinfection of drinking water are the chlorine dose, demand, residual concentration, and contact time after the demand has been exceeded. The chlorine dose is the amount of chlorine added per unit volume of water and is usually expressed in parts per million or its equivalent mg/L. The chlorine demand is the amount of chlorine per liter of water that reacts with inorganic and organic matter (including microorganisms) and is no longer available for disinfection. After the demand is completely satisfied, any remaining chlorine will be free chlorine that is available to be measured as a residual. The residual chlorine will react with any contaminants that subsequently get into the water and prevent regrowth of inactivated bacteria in any storage and distribution system that may be in use.

E-33. There are two types of hypochlorite—dry and liquid. These are explained below:

- Dry hypochlorites (high-test) added to water form hypochlorite solutions containing an excess of alkaline material, which tend to increase the pH. If the pH of the hypochlorite and water mixture rises high enough, calcium in the water and in calcium hypochlorite precipitates as calcium carbonate sludge. If precipitate separates from solution or suspension, allow the hypochlorite and water mixture to stand so that the calcium carbonate may settle out. After the liquid hypochlorite solution settles, decant it into a separate tank for use. Dry hypochlorites use calcium hypochlorite and lithium hypochlorite. High-test hypochlorite products contain about 70 percent available chlorine and three to five percent limes.
  - Calcium hypochlorite is available in granular, powdered, or tablet forms and is readily soluble in water. Ship granular and tablet forms in 35 or 100-pound drums, cases, or smaller reusable cans. This is the form of chlorine found most often in Army water treatment operations.
  - Lithium hypochlorite contains about 35 percent available chlorine, readily dissolves in water, and does not raise the pH as much as other hypochlorite forms. Lithium hypochlorite is available in granular form. It is generally used for disinfecting swimming pools.
- The liquid hypochlorite solutions are clear to light yellow in color, strongly alkaline, and corrosive. These solutions are shipped in plastic jugs, carboys, and rubber-lined drums of up to 50-gallon volumes. Sodium hypochlorite is available commercially in liquid form. Household bleach is a sodium hypochlorite solution containing about five percent available chlorine. The usual concentration of sodium hypochlorite is between five and 15 percent available chlorine.

E-34. Store hypochlorites at temperatures below 86ºF to reduce the rate of decomposition and deterioration. Unlike calcium hypochlorite, which can be stored for up to a year, sodium hypochlorite solution has a shelf life of 60 to 90 days. Store sodium hypochlorite (liquid) solutions in a well-ventilated, dry, cool, and darkened area or in containers protected from light. Store hypochlorite solutions in rubber-lined or polyvinyl chloride lined steel tanks fed through fiberglass, saran-lined, or polyvinyl chloride piping. Store calcium hypochlorite (powder) in a well-ventilated, dry, cool, and darkened area, protected from sunlight. Calcium hypochlorite is a strong oxidizer. Separate and do not store with incompatible products. It will react vigorously with acids to generate heat and toxic chlorine gas. Dry calcium hypochlorite will react with organics such as fuels, oils, greases, solvents, lotions, cosmetics, food, dead vegetation, cardboard, soap, and many other organics containing materials that spontaneously start a fire.

E-35. Table E-1 is the strength of chlorine solutions table used by water treatment specialists to determine the strength of the solution used. Water treatments specialists will first determine the desired mg/L of chlorine.

Table E-1. Strength of chlorine solutions

Type of chlorine material	*Strength of chlorine*
Liquid sodium hypochlorite	5 percent (%) solution
Solid chlorinated lime	25 percent (%) solution
Solid calcium hypochlorite	70 percent (%) solution
Gaseous chlorine	100 percent (%) solution

E-36. Table E-2 is the chlorine dosage calculator used to determine how much chlorine material must be used to chlorinate a given amount of water. Water treatment specialists will compute the number of gallons to be chlorinated, which will intersect the amount of chlorine material required in table E-2. TB MED 577/NAVMED P-5010-10/AFMAN 48 138_IP also provides chlorine dosage calculators that are useful to water treatment specialists.

+Table E-2. Chlorine dosage calculator

Gallons of water to be chlorinated ▼	*Desired parts per million*											
	1	1	1	1	5	5	5	5	25	25	25	25
	Strength of chlorine solution											
	5%	25%	70%	100%	5%	25%	70%	100%	5%	25%	70%	100%
50,000 gal	1 gal	1 lb 12 oz	10 oz	7 oz	5 gal	8 lb 12 oz	3 lb	2 lb 2oz	25 gal	43 lb 12 oz	15 lb	10 lb 10 oz
25,000 gal	2 qt	14 oz	5 oz	3.5 oz	2.5 gal	4 lb 6 oz	1 lb 8 oz	1 lb 1 oz	12.5 gal	21 lb 14 oz	7 lb 8 oz	5 lb 5 oz
10,000 gal	25.6 oz	5.6 oz	2 oz	1.4 oz	1 gal	1 lb 12 oz	9.6 oz	6.8 oz	5 gal	8 lb 12 oz	3 lb	2 lb 2 oz
5,000 gal	12.8 oz	2.8 oz	1 oz	0.7 oz	2 qt (64 oz)	14 oz	4.8 oz	3.4 oz	2.5 gal	4 lb 6 oz	1 lb 8 oz	1 lb 1 oz
2,000 gal	5.12 oz	1.12 oz	0.4 oz	0.28 oz	25.6 oz	5.6 oz	1.92 oz	1.36 oz	1 gal	1 lb 12 oz	9.6 oz	6.8 oz
1,000 gal	2.56 oz	0.56 oz	0.2 oz	0.14 oz	12.8 oz	2.8 oz	0.96 oz	0.68 oz	2 qt	14 oz	4.8 oz	3.4 oz
500 gal	1.28 oz	0.28 oz	0.1 oz		6.4 oz	1.4 oz	0.48 oz	0.34 oz	1 qt	7 oz	2.4 oz	1.7 oz
200 gal	0.51 oz	0.11 oz			2.56 oz	0.56 oz	0.2 oz	0.14 oz	12.8 oz	2.8 oz	0.96 oz	0.68 oz
100 gal	0.26 oz				1.2 oz	0.28 oz	0.1 oz		6.4 oz	1.4 oz	0.48 oz	0.34 oz
50 gal	0.13 oz				0.64 oz	0.14 oz			3.2 oz	0.7 oz	0.24 oz	0.17 oz
25 gal	0.064 oz				0.32 oz				1.6 oz	0.35 oz	0.12 oz	
10 gal	0.026 oz				0.128 oz				0.64 oz	0.14 oz		
5 gal	0.013 oz				0.064 oz				0.32 oz			

gal gallons **lb** Pounds **oz** ounces **qt** quarts

Ozone

E-37. Ozone is an unstable form of oxygen that kills organisms faster than chlorine. Ozone, as a disinfection agent, is less influenced by pH and water temperature than chlorine. Another advantage of ozone is that it does not form compounds that create or intensify odors in the water. The main disadvantage of ozone is that it provides no lasting residual disinfecting action. In addition, because of its instability, ozone is usually generated at the point of use. The process is not as adaptable to variations in flow rate and water quality as chlorine.

Chlorine Dioxide

E-38. Chlorine dioxide is a red-yellow gas or liquid with a very irritating odor. It has over two and half times the oxidation capacity of chlorine, but its rate of reaction is slower and the mechanism of disinfection is completely different. It is effective over a broad pH range (five to nine) and sunlight does not affect it. A major advantage of chlorine dioxide is that it does not hydrolyze in water and will not react with organic compounds to form trihalomethanes.

CHLORINATION EFFECTIVENESS

E-39. Chlorination is the treatment of water by adding chlorine either as a gas, a liquid hypochlorite (sodium) solution, or as a dry hypochlorite (calcium) powder, usually for the purpose of disinfection or oxidation. In most cases, potable water is disinfected by chlorination. The effectiveness of chlorine disinfection is affected by different variables as described below.

E-40. As the pH of the water increases from five to nine, the form of the chlorine residual changes from hypochlorous acid to hypochlorite ion, which is less effective. The most effective disinfection occurs when the pH is between 5.5 and 6.5. At the same pH, a longer contact time results in increased disinfection. Contact time is the time elapsing between the introduction of the chlorine and the use of the water. The required contact time is inversely proportional to residual, within normal limits. If the residual is halved, the required contact period is doubled. TB MED 577/NAVMED P-5010-10/AFMAN 48-138 IP requires a minimum of 30 minutes contact time before product water is tested for residual to determine potability. A free available chlorine residual of two parts per million must be maintained for water to be potable after the 30-minute contact time.

E-41. The type and density of organisms present (viruses, bacteria, protozoa, helminths, or other) have effects on the overall resistance to chlorine. Bacteria are most susceptible to chlorine disinfection whereas the cysts of the protozoa entamoeba histolytica and giardia lamblia are the most resistant.

E-42. The microorganism kill rate tends to be slower at lower temperatures, requiring higher chlorine residuals or longer contact times. Disinfection efficiency increases in warm water. Longer contact time or increased chlorine dosage is required when the water temperature is low. Effectiveness of free chlorine at 35° F is about half of that at 70° F.

E-43. During disinfection, chemical compounds such as those containing ammonia and organic material can exert chlorine demand. Chlorine demand is the chlorine required to react with chlorine-destroying compounds. When these reactions occur, the chlorine is not available for disinfection. Disinfection cannot begin until chlorine demand has been satisfied. Some of the compounds in water that exert a chlorine demand include iron, manganese, hydrogen sulfide, ammonia, and miscellaneous organic compounds. This requires adding sufficient chlorine to the water supply to satisfy the chlorine demand in addition to the amount required for actual disinfection.

E-44. Adequate mixing of chlorine and chlorine-demanding substances is important because suspended solids can surround and protect organisms from the disinfectant. Thoroughly mix the disinfecting agent to ensure all disease-producing organisms are exposed to the chlorine for the required contact time.

CHLORINATION TREATMENT

E-45. Combined residual chlorination involves applying chlorine to water to produce a combined available chlorine residual and maintain that residual throughout water treatment and distribution operations. Combined available chlorine forms are less effective as disinfectants than free available chlorine forms.

About 25 times as much combined available residual chlorine is required to obtain equivalent bacterial kills than free available residual chlorine under the same conditions of pH, temperature, and contact time. About 100 times longer contact time is needed to obtain bacterial kills for equal amounts of combined versus free available chlorine residuals under similar conditions. Operators use combined residual chlorination to prevent algae and bacteria growth in potable water distribution systems. Combined chlorine residuals can maintain a stable residual throughout the system to the point of usage at the distribution point. In some cases, free residual chlorination is used to ensure effective disinfection, followed by the addition of ammonia to convert the free residual to a combined available residual.

FREE RESIDUAL CHLORINATION

E-46. Free residual chlorination involves producing a free available chlorine residual through part or all of the water treatment and distribution operations. Free available chlorine is the equilibrium product present in the forms of hypochlorous acid or hypochlorite ions. If the water contains no ammonia or other nitrogenous materials, applying chlorine to the water will form free available chlorine residuals. If the water contains ammonia and combined available chlorine residuals are formed, sufficient chlorine is added to destroy the combined chlorine residual. Free residual chlorination provides initial disinfection with a contact period of about 10 minutes, whereas combined chlorine residual requires at least 60 minutes. Changes in pH and temperature will affect free chlorine efficacy. Combined chlorine residual must be increased significantly with increases in pH and decreases in temperature.

BREAKPOINT CHLORINATION

E-47. ***Breakpoint chlorination*** **is the application of chlorine to water containing free ammonia.** It is the point at which enough free chlorine is added to break the molecular bonds, to disinfect a solution. Adding chlorine to water with ammonia forms chloramines. Chloramine (chemistry elements and compounds) is an unstable colorless liquid with a pungent odor made by the reaction of sodium hypochlorite and ammonia. With additional application, chlorine residuals increase and reach a maximum when the ratio of chlorine to ammonia is equal. As greater dosages of chlorine are applied and the ratio of chlorine to ammonia increases, ammonia is oxidized by the chlorine to reduce the chlorine residual. When approximately 10 mg/L of chlorine is added for each mg/L of ammonia present, chlorine residuals decline to a minimum value. This is the breakpoint and represents a point where further addition of chlorine produces a free residual. Figure E-5 shows a breakpoint chlorination chart. The actual amount of chlorine required to arrive at the breakpoint varies between 7 and 15 times the ammonia nitrogen content of the water. Due to the presence of organic and other chlorine reactive materials, reaching breakpoint may require the application of up to 25 times as much chlorine as ammonia nitrogen. Beyond the breakpoint, the residual should have at least 90 percent free available residual chlorine. The rate of the breakpoint reaction appears to be most rapid between a pH of seven and eight, and it increases with a higher temperature. Nitrogen trichloride forms after the breakpoint treatment if pH levels are below eight and will cause the water to develop an unpleasant odor. Exposing the water to air provides for the release of nitrogen trichloride. Suspended solids can surround and protect organisms from the disinfectant.

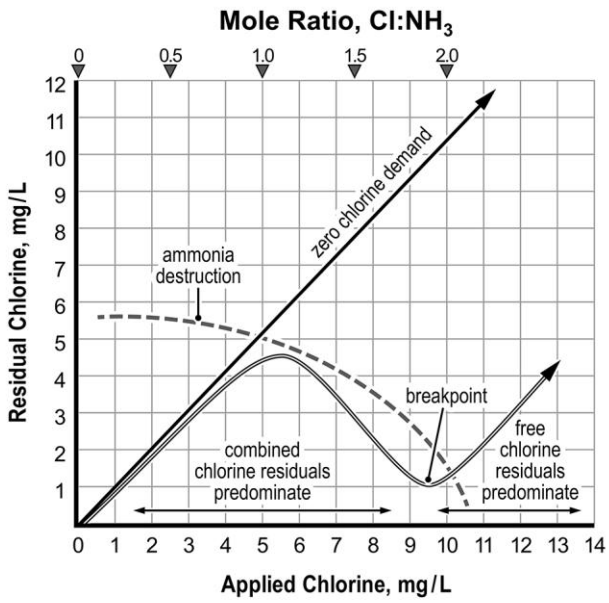

Cl chlorine
mg/L milligrams per liter
NH_3 ammonia

Figure E-5. Breakpoint chlorination chart

This page intentionally left blank.

Glossary

The glossary lists acronyms and terms with Army or joint definitions. Where Army and joint definitions differ, (Army) precedes the definition. The glossary lists terms for which ATP 4-44/MCRP 3-40D.14 is the proponent with an asterisk (*) before the term. For other terms, it lists the proponent publication in parentheses after the definition.

SECTION I – ACRONYMS AND ABBREVIATIONS

ADP	Army doctrine publication
AFMAN	Air Force manual
AHS	Army Health System
AO	area of operations
AOR	area of responsibility
AR	Army regulation
ATP	Army techniques publication
BSB	brigade support battalion
CBRN	chemical, biological, radiological, and nuclear
CLB	combat logistics battalion
COP	common operational picture
CSC	composite supply company
CSSB	combat sustainment support battalion
DA	Department of the Army
DA Pam	Department of the Army Pamphlet
DD	Department of Defense (form)
DIB	distribution integration branch
DLA	Defense Logistics Agency
DMC	distribution management center
DOD	Department of Defense
DODD	Department of Defense directive
DOS	days of supply
DSB	division sustainment brigade
DSSB	division sustainment support battalion
ESB	engineer support battalion
ESC	expeditionary sustainment command
EWDS	expeditionary water distribution system
FAWPSS	forward area water point supply system
FM	field manual
FSC	forward support company
G-3	assistant chief of staff, operations
G-4	assistant chief of staff, logistics

GPH	gallons per hour
GPM	gallons per minute
HQDA	Headquarters, Department of the Army
ISO	International Organization for Standardization
J-4	logistics directorate of a joint staff
JP	joint publication
JPO	joint petroleum office
JWRMAG	Joint Water Resources Management Action Group
LHS	load handling system
LOC	line of communications
LOGSTAT	logistics status
LWP	lightweight water purifier
LWPS	lightweight water purification system
MAGTF	Marine air-ground task force
MCPP	Marine Corps Planning Process
MCRP	Marine Corps reference publication
MCWP	Marine Corps warfighting publication
MDMP	military decision-making process
MEF	Marine expeditionary force
MEU	Marine expeditionary unit
mg/L	milligrams per liter
MIL-STD	Military Standard
MLG	Marine logistics group
MOS	military occupational specialty
MRE	meal, ready to eat
MWSS	Marine wing support squadron
NATO	North Atlantic Treaty Organization
NCO	noncommissioned officer
NTRP	Navy tactical reference publication
OE	operational environment
OISS	ocean intake structure system
OPCON	operational control
OPLOG	operational logistics
OPORD	operation order
OPTEMPO	operating tempo
pH	potential hydrogen
PLS	palletized load system
PM	preventive medicine
POL	petroleum, oils, and lubricants
PWPS	platoon water purification system
QLET	quick logistics estimation tool

RLT	regimental landing team
ROWPU	reverse osmosis water purification unit
S-1	battalion or brigade personnel staff officer
S-3	brigade or battalion operations staff officer
S-4	brigade or battalion logistics staff officer
SIXCON	six container
SMFT	semi-trailer mounted fabric tank
SOP	standard operating procedure
SPO	support operations
STANAG	standardization agreement (NATO)
TB MED	technical bulletin medical
TC	training circular
TDS	total dissolved solids
TM	technical manual
TPC	theater petroleum center
TPWG	theater petroleum and water group
TSC	theater sustainment command
TWDS	tactical water distribution system
TWPS	tactical water purification system
U.S.	United States
USAMC	United States Army Materiel Command
USC	United States Code
WSDS	water storage and distribution system

SECTION II – TERMS

***alkalinity**

The content of carbonates, bicarbonates, hydroxides, and occasionally berates, silicates, and phosphates in water.

Army Health System

A component of the Military Health System that is responsible for operational management of the health service support and force health protection missions for training, predeployment, deployment, and postdeployment operations. The Army Health System includes all mission support services performed, provided, or arranged by the Army Medicine to support health service support and force health protection mission requirements for the Army and as directed, for joint, intergovernmental agencies, coalition, and multinational forces. (FM 4-02)

***breakpoint chlorination**

The application of chlorine to water containing free ammonia.

crisis

An emerging incident or situation involving a possible threat to the United States, its citizens, military forces, or vital interests that develops rapidly and creates a condition of such diplomatic, economic, or military importance that commitment of military forces and resources is contemplated to achieve national and/or strategic objectives. (JP 3-0)

force health protection

(joint) Measures to promote, improve, or conserve the behavioral and physical well-being of Service members to enable a healthy and fit force, prevent injury and illness, and protect the force from health hazards. (JP 4-02)

***influent**

Water flowing into a reservoir, basin, or treatment operation.

planning

The art and science of understanding a situation, envisioning a desired future, and determining effective ways to bring that future about. (ADP 5-0)

retrograde of materiel

An Army logistics function of returning materiel from the owning or using unit back through the distribution system to the source of supply, directed ship to location, or point of disposal. (ATP 4-93)

sustainment preparation of the operational environment

The analysis to determine infrastructure, physical environment, and resources in the operational environment that will optimize or adversely impact friendly forces means for supporting and sustaining the commander's operations plan. (ADP 4-0)

References

All websites accessed on 26 March 2025.

REQUIRED PUBLICATIONS

These documents must be available to intended users of this publication.

Department of Defense Dictionary of Military and Associated Terms. June 2025.

FM 1-02.1. *Operational Terms*. 28 February 2024.

FM 1.02.2. *Military Symbols.* 23 January 2025.

Marine Corps Supplement to the Department of Defense Dictionary of Military and Associated Terms. 10 September 2020.

RELATED PUBLICATIONS

These documents are cited in this publication.

JOINT AND DEPARTMENT OF DEFENSE PUBLICATIONS

Most joint publications are available online: https://www.jcs.mil/Doctrine/. DoD Issuances are available at: https://www.esd.whs.mil/Directives/issuances/dodd/.

DODD 4705.01E. *Management of Land-Based Water Resources in Support of Contingency Operations*. 3 June 2015.

JP 3-0. *Joint Campaigns and Operations*. 18 June 2022.

JP 3-31. *Joint Land Operations*. 3 October 2019.

JP 3-36. *Joint Air Mobility and Sealift Operations*. 4 January 2021.

JP 4-02. *Joint Health Services*. 29 August 2023.

JP 4-03. *Joint Bulk Petroleum and Water Doctrine*. 11 January 2016.

ARMY PUBLICATIONS

Most Army doctrinal publications are available online: https://armypubs.army.mil.

ADP 3-0. *Operations*. 21 March 2025.

ADP 4-0. *Sustainment*. 31 July 2019.

ADP 5-0. *The Operations Process.*31 July 2019.

AR 40-5. *Army Public Health Program.* 12 May 2020.

AR 700-136. *Tactical Land-Based Water Resources Management.* 16 July 2024.

ATP 3-90.97. *Mountain Warfare and Cold Weather Operations*. 29 April 2016.

ATP 4-02.10. *Theater Hospitalization*. 14 August 2020.

ATP 4-11. *Army Motor Transport Operations*. 14 August 2020.

ATP 4-14. *Expeditionary Railway Center Operations*. 22 June 2022.

ATP 4-15. *Army Watercraft Operations*. 3 April 2015.

ATP 4-48. *Aerial Delivery*. 28 August 2023.

ATP 4-91. *Division Sustainment Operations*. 8 November 2022.

ATP 4-93. *Theater Sustainment Operations*. 1 May 2023.

DA Pam 40-11. *Army Public Health Program*. 18 May 2020.

DA Pam 385-10. *Army Safety and Occupational Health Program Procedures*. 24 July 2023.

FM 3-0. *Operations.* 21 March 2025.

FM 3-94. *Armies, Corps, and Division Operations*. 23 July 2021.

FM 4-0. *Sustainment Operations*. 14 August 2024

FM 4-02. *Army Health System*. 17 November 2020.

FM 5-0. *Planning and Orders Production.* 4 November 2024.

FM 6-27/MCTP 11-10C. *The Commander's Handbook on The Law of Land Warfare*. 7 August 2019.

FM 6-99. *U.S. Army Report and Message Formats*. 17 May 2021.

STP 10-92W14-SM-TG. *Soldier's Manual and Trainer's Guide, MOS 92W, Water Treatment Specialist, Skill Levels 1, 2, 3, and 4*. 20 November 2005.

TB MED 577/NAVMED P-5010-10/AFMAN 48-138_IP. *Sanitary Control and Surveillance of Field Water Supplies*. 1 May 2010.

TB MED 593. *Guidelines for Field Waste Management*. 15 September 2006.

TC 4-02.3. *Field Hygiene and Sanitation*. 6 May 2015.

TM 3-34.56/MCRP 3-40B.7. *Waste Management for Deployed Forces*. 29 March 2019.

TM 4-33.31. *Cold Weather Maintenance Operations*. 9 February 2017.

TM 5-4610-228-13/TM 08846A-13/1. *Operator's, Organizational, and Direct Support Maintenance Manual for Water Distribution System Model WDS 20K (NSN 4610-01-120-7529); Model WDS 40K (4610-01-114-1451); Model WDS 300K (4610-01-114-1453); Model WDS 800K (4610-01-114-1450); Model WDS 1,000K (4610-01-114-1452)*. 30 May 1986.

TM 9-2330-267-13&P. *Operator and Field Maintenance Manual Including Repair Parts and Special Tools Lists (RPSTL) for Trailer, Tank, Water: 400 Gallon, 1-1/2 Ton, 2 Wheel, NSN 2330-01-108-7367 (EIC CEA), M149A2*. 7 December 2015.

TM 10-2330-402-13&P. *Technical Manual Operator and Field Maintenance Manual Including Repair Parts and Special Tools List for Unit Water Pod System (Camel II) NSN 2330-01-580-7654 Model Camel II 800*. 21 July 2014.

TM 10-4320-303-13. *Operator`s, Unit and Direct Support Maintenance Manual for Tactical Water Distribution Equipment System (TWDS) Set 10-Mile Segment, Models 06749-0183-81, 110-00-0000, 919 AND 10 (NSN 4320-01-122-3547) (4320-01-168-0591) (4320-01-168-0590) (4320-01-221-6006)*. 30 June 1993.

TM 10-4320-346-12&P. *Operator`s and Unit Maintenance Manual Including Repair Parts and Special Tools List (RPSTL) for Forward Area Water Point Supply System (FAWPSS) Model LAB 9095 (NSN 4320-01-359-0369)(EIC: ZFW) Model M105 (NSN 4320-01-532-7057)*. 16 March 2007.

TM 10-4610-232-13-1. *Operator`s and Field Maintenance Manual for Water Purification Unit, Reverse Osmosis, 3,000 GPH Trailer Mounted, Flatbed Cargo,22-1/2 Ton, 8 Wheel Tandem WTA-060 NSN 4610-01-219-8707 ROWPU-1 NSN 4610-01-371-1790*. 4 March 2013.

TM 10-4610-232-13-2. *Operator`s and Field Maintenance Manual for Water Purification Unit, Reverse Osmosis, 3,000 GPH Trailer Mounted, Flatbed Cargo,22-1/2 Ton, 8 Wheel Tandem WTA-060 NSN 4610-01-219-8707 ROWPU-1 NSN 4610-01-371-1790*. 4 March 2013.

TM 10-4610-309-10/TM 10802A-OI/1A Volume 1. *Operator Manual for Tactical Water Purification System (TWPS) NSN 4610-01-488-9656 MARINE CORPS NSN 4610-01-488-6961*. 15 May 2008.

TM 10-4610-309-23/TM 10802A-OI/1A VOL 2. *Field Maintenance Manual for Tactical Water Purification System (TWPS) Army (NSN: 4610-01-488-9656) Marine Corps (NSN: 4610-01-488-6961)*. 15 May 2008.

TM 10-4610-310-13. *Technical Manual Operator and Field Maintenance Manual for Lightweight Water Purifier Part Number 7859MFG NSN 4610-01-495-0046*. 15 October 2009.

TM 10-4610-310-23P. *Field Maintenance Repair Parts and Special Tools List for Lightweight Water Purifier Part Number 7859MFG (NSN: 4610-01-495-0046)*. 15 October 2009.

TM 10-5430-240-13&P. *Operator, Unit, and Direct Support Maintenance Manual (Including Repair Parts and Special Tools List) Tank, Fabric, Collapsible, Water, 3,000 and 5,000 Gallons, Semi-*

Trailer Mounted 3,000 Gallon Model PD62783-3000 (EIC = ZJP) (NSN 5430-01-181-4071); Model 91093 (EIC = ZFX) (5430-01-372-6901); 5,000 Gallon Model PD62783-4750 (EIC = ZJJ) (5430-01-120-7823); Model 91094 (EIC = ZFY) (5430-01-372-6900). 5 February 2002.

TM 10-5430-244-10. *Operator`s Manual for Load Handling System (LHS) Compatible Water Tank Rack (HIPPO) M105 (NSN: 5430-01-487-7760) (EIC ZLJ)*. 10 August 2012.

MARINE CORPS PUBLICATIONS

Most Marine Corps publications are available online: https://www.marines.mil/News/Publications/MCPEL/Electronic-Library.

MCTP 3-40H. *MAGTF Supply Operations*. 12 August 2019.

MCWP 5-10. *Marine Corps Planning Process*. 10 August 2020.

TM 112519A-OR/1A. *Operator Manual for Expeditionary Water Distribution System (EWDS)*. January 2016.

TM 11720A-OI. *Operation and Maintenance Manual with Repair Parts List (RPL) for Lightweight Water Purification System. (LWPS)*. 18 July 2011.

TM 13308A-14/1. *Operator and Field Maintenance Manual for Platoon Water Purification System (PWPS) Model 0500134*. 30 April 2021.

NAVY PUBLICATIONS

Most Navy Tactical Reference Publications are available: https://doctrine.navy.mil/.

NTRP 4-04.2.13/FM 3-34.469/AFMAN 32-1072_IP. *Water-Well Drilling Operations*. 1 December 2008.

OTHER PUBLICATIONS

Code of Federal Regulations (CFR) are available at: https://www.ecfr.gov/. Most MIL-STD publications are available online: https://assistca.dla.mil/online/login/welcome.cfm?active=home. Most NATO standardization agreements (STANAG) are available online (validated user account required): https://nso.nato.int.

CFR Title 21. *Food and Drugs. 4 August 2025.*

MIL-STD-2525E. *Joint Military Symbology*. 31 December 2022.

MIL-STD-3006C. *Sanitation Requirements for Food Establishments*. 1 June 2008.

STANAG 2136, Edition 7. *Requirements For Water Quality During Operations*. 19 October 2022.

STANAG 2629, Edition 2. *Water Production, Storage and Distribution.* 22 March 2024

WEBSITES

CASCOM Planning Data Branch.
https://cascom.army.mil/g_staff/cdi/fdd/mld/planning_data_branch.htm

Force Management System.
https://fmsweb.fms.army.mil.

U.S. Army Quartermaster School 92W virtual training tools.
https://cascom.army.mil/asrp/qm-92W.html.

U.S. Army Quartermaster School Petroleum and Water Department.
https://quartermaster.army.mil/pwd/pwd_main.html.

U.S. Environmental Protection Agency.
https://www.epa.gov/ground-water-and-drinking-water/national-primary-drinking-water-regulations – https://www.epa.gov/sdwa/secondary-drinking-water-standards-guidance-nuisance-chemicals.

PRESCRIBED FORMS

This section contains no entries.

REFERENCED FORMS

Unless otherwise indicated, DA forms are available on the Army Publishing Directorate (APD) website at https://armypubs.army.mil; DD forms are available on the Executive Services Directorate website at https://www.esd.whs.mil/Directives/forms.
Defense Occupational Environmental Health Readiness System forms are available to personnel with authorized access to the DOEHRS website: https://doehrs-ih.csd.disa.mil/.

DA Form 2028. *Recommended Changes to Publications and Blank Forms*.

DA Form 2404. *Equipment Inspection and Maintenance Worksheet*.

DA Form 5457. *Potable Water Container Inspection.*

DA Form 5988-E. *Equipment Maintenance and Inspection Worksheet (EGA)*.

DD Form 1712. *Water Reconnaissance Report*.

DD Form 1713. *Daily Water Production Log–3000 GPH ROWPU*.

DD Form 1713-2. *Daily Water Production Log–1500 GPH TWPS*.

DD Form 1713-3. *Daily Water Production Log–125 GPH LWP*.

DD Form 1715. *Daily Water Issue Log*.

DD Form 1715-1. *Daily Water Distribution Log*.

DD Form 1717. *Water Point Daily Production Summary*.

DD Form 3015. *Engineer Reconnaissance Report*.

DOEHRS *Natural Water Source Reconnaissance Survey*.

DOEHRS *Water Container Inspection Survey*.

Index

Entries are by paragraph number.

A

alkalinity, 5-4

Army Medical Department, 1-18, 2-7

B

breakpoint chlorination, E-47

bulk water, 1-13, 1-14

C

combat sustainment support battalion, 2-34

chlorine dioxide, E-38

composite supply company, 2-42

D

Defense Logistics Agency, 2-6

disinfection, 5-23

E

environmental stewardship measures, 5-33

expeditionary water distribution system, A-27

extreme weather conditions, 3-121

F-G

filtration, E-4

forward area water point supply system, 2-53, A-29

H

HIPPO, 1-22, A-30

hydrologic cycle, 5-2

I

influent, E-24

J-K

joint water resources management action group, 2-3

L

lightweight water purification system, 2-62, A-15

M-N

Marine Corps water consumption planning factors, 3-139

O

ocean intake structure system, B-42

P-Q

packaged water, 1-15

potability and palatability, 1-5

platoon water purification system, A-20

R

reverse osmosis water purification unit (ROWPU), 2-9

S

saltwater intrusion, B-35

T

tactical water distribution system, A-26

tactical water purification system, A-6

tactical water purification system (Marine Corps), A-18, A-19

U-V

universal unit-level water requirements, 3-132

W-Z

water buffalo, 2-57, A-36

water planning guide, 1-31, 3-108

water quality standards, 1-9, 1-10

water storage and distribution system, 1-19, A-24

This page intentionally left blank.

ATP 4-44, C1
MCRP 3-40D.14

08 July 2026

By Order of the Secretary of the Army:

CHRISTOPHER C. LANEVE
General, United States Army
Vice Chief of Staff

Official:

MATTHEW L. SANNITO
Administrative Assistant
to the Secretary of the Army
2618806

DISTRIBUTION:
Active Army, Army National Guard, and United States Army Reserve.
Distributed in electronic media only (EMO).

By Order of the Commandant of the Marine Corps:

JENNIFER A. NASH
COLONEL, UNITED STATES MARINE CORPS
Commanding Officer,
Marine Corps Engineer School

Marine Corps Distribution: To be distributed in accordance with PCN 144 000196 02.

This page intentionally left blank.

PIN:105637-001

PCN: 144 000196 02