PNNL-33984

An Introductory Guide to Generating, Using, and Storing Energy

Understanding electricity, energy storage, microgrids, and related technologies

April 2023

Jessica Kerby
Molly Hall
Arthur Santos
Kendall Parker
Li He

U.S. DEPARTMENT OF ENERGY
Pacific Northwest NATIONAL LABORATORY
Sandia National Laboratories

DISCLAIMER

This report was prepared as an account of work sponsored by an agency of the United States Government. Neither the United States Government nor any agency thereof, nor Battelle Memorial Institute, nor any of their employees, makes **any warranty, express or implied, or assumes any legal liability or responsibility for the accuracy, completeness, or usefulness of any information, apparatus, product, or process disclosed, or represents that its use would not infringe privately owned rights**. Reference herein to any specific commercial product, process, or service by trade name, trademark, manufacturer, or otherwise does not necessarily constitute or imply its endorsement, recommendation, or favoring by the United States Government or any agency thereof, or Battelle Memorial Institute. The views and opinions of authors expressed herein do not necessarily state or reflect those of the United States Government or any agency thereof.

PACIFIC NORTHWEST NATIONAL LABORATORY
operated by
BATTELLE
for the
UNITED STATES DEPARTMENT OF ENERGY
under Contract DE-AC05-76RL01830

Printed in the United States of America

Available to DOE and DOE contractors from the
Office of Scientific and Technical Information,
P.O. Box 62, Oak Ridge, TN 37831-0062;
ph: (865) 576-8401
fax: (865) 576-5728
email: reports@adonis.osti.gov

Available to the public from the National Technical Information Service
5301 Shawnee Rd., Alexandria, VA 22312
ph: (800) 553-NTIS (6847)
email: orders@ntis.gov <https://www.ntis.gov/about>
Online ordering: http://www.ntis.gov

Foreword

The U.S. Department of Energy's Energy Storage for Social Equity (ES4SE) Initiative is designed to advance the prosperity, well-being, and resilience of urban, rural, indigenous, and tribal disadvantaged communities. It helps these communities address their energy system challenges by considering energy storage technologies and applications as a viable path forward.

The two-pronged effort features a Technical Assistance (TA) Program and Project Development and Deployment Assistance (PDDA) Program. Under the ES4SE Initiative, Pacific Northwest National Laboratory provides direct TA that gives communities the information, tools, and resources needed to understand their community goals and how energy storage and renewable generation technologies can support their needs and long-term resilience, reliability, and independence goals Sandia National Laboratories then leads the PDDA phase by providing engineering and financial support to deploy energy storage systems in the communities helping convert the TA efforts into tangible results.

The comprehensive and personalized assessments of energy storage feasibility, design, and application provided by the TA Program are intended to not only help communities meet their goals and enable positive outcomes, but also (1) give them a deeper understanding of their energy system challenges and possible solutions, (2) develop a network of people to serve as a valuable resource long after the TA Program is over, and (3) implement solutions to their community-defined challenges.

The results derived from each TA Assessment are reported in technical memoranda such as this one.

More information about the program is available at the following links.
https://www.pnnl.gov/projects/energy-storage-social-equity-initiative
https://www.pnnl.gov/projects/energy-storage-social-equity-initiative/technical-assistance-program

Cautionary Note: Lithium-ion batteries are generally safe but can fail due to internal faults or if they are used incorrectly. This can lead to the release of toxic and flammable gases resulting in fire and/or explosion with a risk of death and catastrophic damage to nearby facilities. PNNL follows the best practices for energy storage systems (ESSs) and therefore only recommends ESSs that comply with site-specific code requirements and industry safety standards. The Standard for the Installation of Stationary ESSs (NFPA 855) requires Underwriters' Laboratories (UL) 9540 certification—a global safety certification indicates market products have undergone testing and evaluation confirm they are reliable and meet industry safety standards. UL 9540 is a safety standard for ESSs that operate interconnected to the grid or in stand-alone applications and designates aspects of fire detection and suppression, containment, and environmental performance. Therefore, given performance and especially safety considerations, PNNL only recommends using a certified UL 9540 ESS.

However, PNNL also recognizes the need for assistance for underserved communities that might not be able to pay for or are required to use certified UL 9540 ESS. PNNL reiterates its position to follow safety and applicable codes or best practices and to inform the community about the threats that a noncertified system might pose, but leaves this decision to be made by the community.

Acronyms and Abbreviations

A	ampere(s)
AC	alternating current
AGM	Absorbed Glass Mat
BCU	Battery Control Unit
BESS	battery energy storage systems
CAD	computer-aided design
CEPA	Coast Electric Power Association
DC	direct current
DER	distributed energy resource
DG	distributed generation
DoD	depth of discharge
DOE	U.S. Department of Energy
E-House	Electrical House
ES4SE	Energy Storage for Social Equity
ESS	energy storage systems
FortZED	Fort Collins Zero Energy District
Hr	hour(s)
Hz	hertz
I	current
IEC	International Electrotechnical Commission
IEEE	Institute of Electrical Electronics Engineers
IRENA	International Renewable Energy Agency
LAB	lead acid batteries
LCO	lithium cobalt oxide
LFP	lithium iron phosphate
LMO	lithium manganese oxide
NCA	nickel, cobalt, alumina
NEC	National Electrical Code
NFPA	National Fire Protection Agency
NMC	nickel, manganese, cobalt
O&M	operations and maintenance
OCEI	Oakland Clean Energy Initiative
OSHA	Occupational Health and Safety Administration
P	power
PNNL	Pacific Northwest National Laboratory
PV	photovoltaic(s)

R	resistance
SCADA	Supervisory Control and Data Acquisition
SDG&E	San Diego Gas & Electric
SE	southeast
SNL	Sandia National Laboratories
SoC	state of charge
SQL	Structured Query Language
SW	southwest
TOU	time of use
V	volt(s); voltage
VAR	volt-ampere reactive
W	watt(s)
Wh	watt-hour(s)

Contents

Foreword ii
Acronyms and Abbreviations iii
1.0 Introduction 1
2.0 Basics of Electricity 1
2.1 Measuring Electricity 2
2.2 Voltmeter Usage 3
2.3 Electrical Safety 4
2.4 Power vs. Energy Concept 6
2.5 Power vs. Energy Consumption 6
3.0 Generation 6
3.1 Types of Power Distribution and Sources of Energy Generation 7
3.2 Power Conversion 8
3.2.1 Why Is it Necessary? 8
3.2.2 Frequency and Voltage in the United States 9
4.0 Typical Household Loads 10
4.1 High-Demand Loads 10
4.2 Continuous Loads 10
4.3 Impact of Load on On-Site Generation and Battery Storage 11
4.4 Cost of Electricity in the United States 12
4.5 How to Save Energy 13
4.6 Energy Efficiency 13
5.0 Photovoltaics: How Does it Work? 14
5.1 What is a PV panel? 15
5.2 Series and Parallel 15
5.3 IV Curve, Maximum Power Point 16
5.4 Charge Controller 17
5.5 Inverter 17
5.6 Lifetime 17
5.7 Funding Structure 17
6.0 Energy Storage 18
6.1 Types of Energy Storage 18
6.2 Benefits and Use of Energy Storage 19
6.3 How Is Energy Storage an Equity Asset? 21
6.4 Battery Energy Storage 22
6.4.1 Batteries: How Do They Work? 22
6.4.2 Voltage Variation with Charging/Discharging 23
6.4.3 State of Charge vs. Voltage 23

6.4.4 Battery Capacity 24
6.4.5 Discharging/Charging Rate 24
6.5 Types of Battery Energy Storage 24
6.5.1 Lithium Ion 24
6.5.2 Lithium Iron Phosphate 26
6.5.3 Nickel Manganese Cobalt 26
6.5.4 Lead-Acid 26
6.5.5 Flooded Lead-Acid 26
6.5.6 Sealed Lead-Acid 26
6.5.7 Absorbed Glass Mat 27
6.5.8 Gel 27
6.6 Maintenance of Batteries 27
6.7 Controls 29
6.8 HVAC, Enclosures, and Structures 29
6.9 Assuring Safety and Managing Risks 30
6.9.1 Lithium-Ion Batteries 30
6.9.2 Lead-Acid Batteries 31
7.0 How to Size a PV + BESS 31
7.1 Demand or Load Analysis 31
7.1 Sizing by Available Area 33
7.2 Battery and Component Sizing 33
7.3 PV, Storage, and Inverter Technologies 34
7.3.1 Lithium-Ion Battery Technologies 35
7.3.2 Inverter Technologies 35
8.0 Microgrids Overview 35
8.1 Key Drivers 36
8.2 Microgrid Variations 37
9.0 Designing a Microgrid 38
9.1 Key Components 38
9.2 Financial Perspective 40
9.3 O&M Costs 40
9.4 Applicable Codes and Standards 42
9.5 Hazards, Mitigation, and Safety 42
9.6 Emissions 43
10.0 Examples of Microgrid Projects 43
10.1 Electrical House 44
10.2 Challenges 45
10.3 Microgrid Controllers 46
11.0 Glossary 47

12.0 References 56

Figures

Figure 1. Flow of electric current compared to flow of electrons in a sample circuit. 2
Figure 2. Electricity in a circuit shown as water flowing down a river. 3
Figure 3. Voltmeter/multimeter. 3
Figure 4. Multimeter probe contact locations and parameter being measured. 4
Figure 5. Left to right: generating stations, step-up transformers, transmission system, substation step-down transformer, distribution system, local consumer loads. 7
Figure 6. Electricity generation by source (U.S. Energy Information Administration). 7
Figure 7. Direct Current Water Analogy 8
Figure 8. Alternating Current Water Analogy 8
Figure 9. Alternating (left) vs Direct (right) Current 9
Figure 10. Typical residential electricity consumption breakdown (U.S. Energy Information Administration, 2015). 10
Figure 11. Electricity dispatch of a sample spring day. 11
Figure 12. Diagram of a photovoltaic panel. 14
Figure 13. Relationship between solar cell (single unit), module (36 cells), and panel (three modules). 15
Figure 14. Solar cells wired in series (top) and parallel (bottom). 16
Figure 15. I-V curve dependence on temperature and radiance vs. baseline. 16
Figure 16. Pumped storage hydropower. 19
Figure 17. Diagram of battery operation in a connected circuit. 22
Figure 18. Diagrams comparing the discharging (left) and charging (right) process of a battery. 23
Figure 19. Diagram of lithium-ion battery components and operation within a circuit. 25
Figure 20. Schematic comparing a flooded (left) and sealed (right) lead-acid battery. 27
Figure 21. Energy storage system components and function (Image Credit: Hyosung Heavy Industries). 29
Figure 22. Energy storage system codes and standards (Image Credit: Matthew Paiss Battery Safety). 30
Figure 23. GHI (Global Horizontal Irradiance) NREL Map 32
Figure 24 Islanded Microgrid 36
Figure 25. Typical components in a microgrid. 38
Figure 26 Example Microgrid One-Line Diagram 39
Figure 27. Examples of e-houses (pictures are courtesy of Romeo Colombara, Electric Engineer). 45

Tables

Table 1. Benefits of energy storage systems (Balducci, et al., 2018). 20
Table 2. Battery chemistry, characteristics, and applications. 25
Table 3. Lithium-ion vs. lead-acid comparison. 28
Table 4. Example Load Table 32
Table 5. PV Sizing by Load.....32
Table 6. PV Sizing by Available Area.....33
Table 7. Battery Sizing.....34
Table 8. Training requirements and desires. 42

1.0 Introduction

This technical memorandum presents educational materials generated to empower Energy Storage for Social Equity (ES4SE) community members to learn more about power systems, energy distribution, renewable energy, and battery storage systems. It was developed in an accessible format for audiences of varied backgrounds and requires no previous experience in energy storage. It is intended to serve readers as both an educational and reference document as they consider, procure, and deploy power systems that include battery energy storage technologies and microgrids in their communities. By providing a complete overview of the basics of electricity, power generation, and household energy consumption and loads, this memo prepares readers to learn even more about battery energy storage, microgrid systems, and the sizing of solar and battery systems.

The following sections of this memo introduce foundational concepts such as how electricity flows, power consumption and electrical safety, then how power is generated and transmitted in the energy grid system, and why all the components are necessary. It discusses how once energy arrives at the household it is consumed and calculated into a load, and how household loads have an impact on transmission systems and power generation. An important conversation then follows about how to conserve energy at the house.

Next, solar energy (photovoltaic or PV arrays) is discussed in depth, including how they work, the necessary components of such systems, and how to make a large solar array. Solar panels are typically coupled with energy storage and are a significant power generator in microgrids, so they are a primary focus. With this fundamental understanding, the main topics of energy storage, sizing systems, and microgrids round out the rest of this memo. Many types of battery energy storage are discussed in detail, including associated safety and maintenance considerations. Sizing a system of battery energy storage and solar is briefly outlined. Finally, the components of microgrids are highlighted—by examples and associated challenges—including their associated finances, operations and maintenance, codes, hazards, and emissions.

2.0 Basics of Electricity

Electricity is the transfer or motion of electrons, which are atomic particles that carry electric charge. There are two types of electricity: static and current. Static electricity is the transfer of electrons from one material to another. The momentary shock you experience after shuffling along a carpeted floor and reaching to touch a doorknob is an example of static electricity. This type of electricity is called static because the electrons tend to remain stationary after they have moved from one material to another. Current electricity, on the other hand, is the motion of electrons through a medium that conducts the flow of electricity, or a conductor. The flow of electricity is called the current, and circuits direct the current with conductors like electric wiring. There are three critical circuit elements: an electron source, such as a battery; conductors, or wires; and a device that consumes electricity, such as a light bulb. Due to an unfortunate historical sign convention (note: sign means +/-), the current actually moves in the opposite direction of the flow of electrons, because electrons are negative in charge. This difference is illustrated in the example circuit shown in Figure 1 (Shively & Ferrare, 2019).

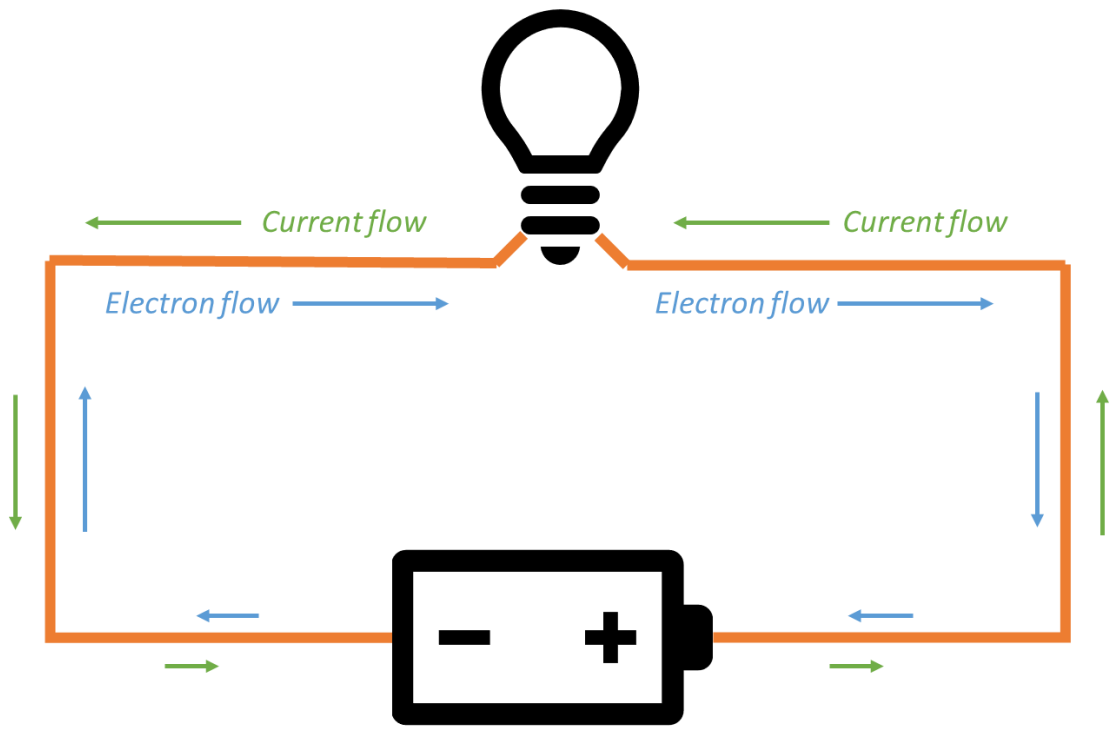

Figure 1. Flow of electric current compared to flow of electrons in a sample circuit.

2.1 Measuring Electricity

Electricity in a circuit flows in much the same way that water flows down a river. The flow of water, or water current, is like the electric current, or flow of electricity. Electric current, I, is measured in amperes, or amps (A). The push of the river, the force that makes the current strong and dangerous or the weak trickle of a stream, is described in a circuit by the voltage, V, measured in volts (V). Finally, the rocks and debris in the river that slow down the flow of water are described in a circuit by resistance, R, measured in ohms (Ω or the Greek capital letter omega). The relationship between these variables is described by Ohm's law, which is traditionally written as:

$$V = I \times R$$

It may be more helpful, however, to rearrange Ohm's law from the perspective of the electric current to understand the relationship between the variables with the metaphor of water flowing down a river, as shown in Figure 2. When Ohm's law is written as:

$$I = \frac{V}{R}$$

we see that the stronger the force of the river, or the voltage, V, the stronger the current because current and voltage are directly related. Conversely, the more debris in the river, or higher resistance, the slower the current, because we divide by the resistance, meaning that current and resistance are inversely related.

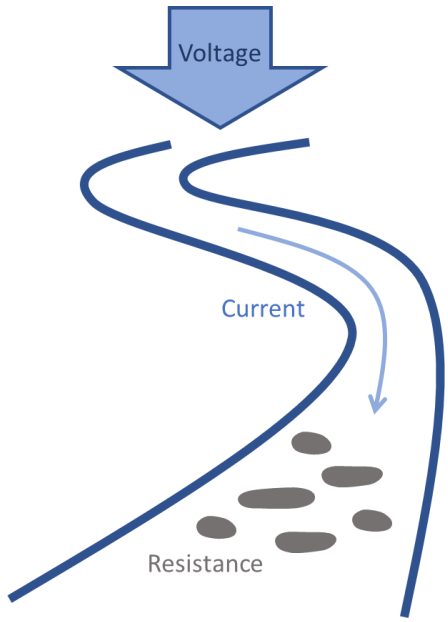

Figure 2. Electricity in a circuit shown as water flowing down a river.

2.2 Voltmeter Usage

To make sure all components of an electric circuit are performing as expected, it is sometimes necessary to measure a component's voltage, current, or resistance. To measure voltage, one can use a voltmeter or multimeter, shown in Figure 3. Most voltmeters are multimeters, in that they can measure multiple electrical parameters, including both current and resistance.

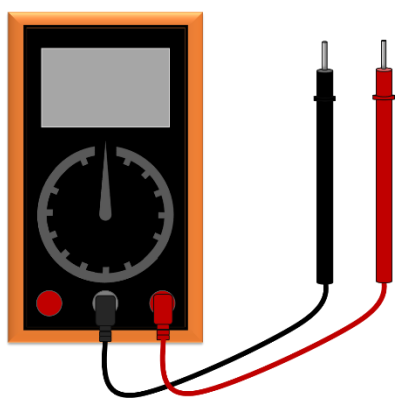

Figure 3. Voltmeter/multimeter.

Using a multimeter can be broken down into the following steps[1].

1. Turn the main dial to select the parameter you want to measure.
2. If multiple options exist, select the setting with the units that match the expected range of the parameter being measured. For example, µA, mA, and 10A all measure current, but with

[1] https://res.cloudinary.com/iwh/image/upload/q_auto,g_center/assets/1/26/Documents/Fluke/114-115-117_usersmanual.pdf

different expected results. Ordered from smallest to greatest value, these units are microamp, milliamp, and 10s of amps.

3. Connect the two probes to the corresponding bottom sockets for the parameter you want to measure. The sockets are labeled in a way similar to the labeling of the dial. The black probe always plugs into the COM or common socket, while the red probe is moved to match what you are measuring.
4. Touching ONLY the plastic handles of the probes, and NEVER the metal leads, first touch the black probe (negative) to the circuit, then the red probe (positive). Where the probes touch the circuit may differ based on what is being measured (Figure 4).

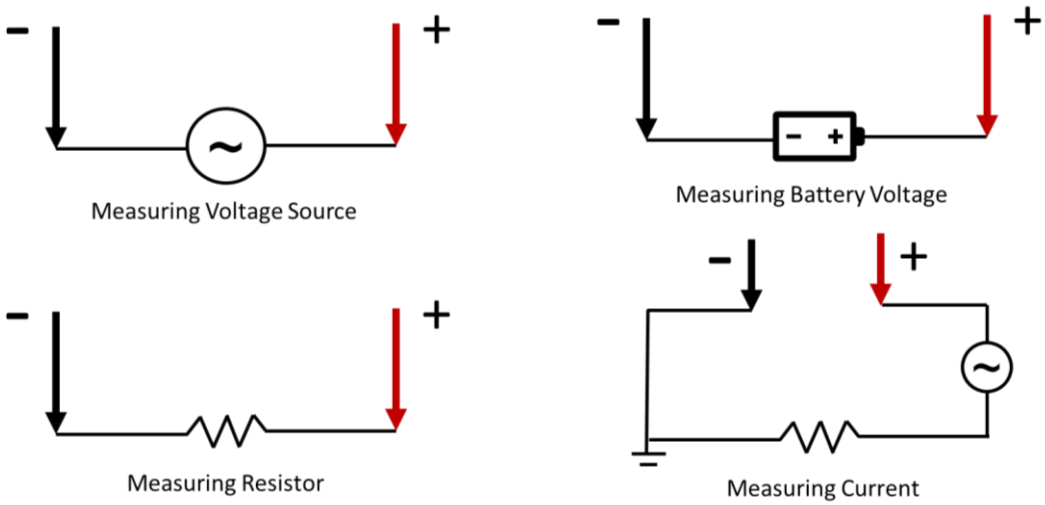

Figure 4. Multimeter probe contact locations and parameter being measured.

Every multimeter will come with a user manual specific to its design that explains its operation in full detail, but the basic operation remains the same across manufacturers.

2.3 Electrical Safety

A comprehensive handbook on electrical safety practices is provided by the U.S. Department of Energy (US Department of Energy, 2013). The most important takeaways from the handbook are the following:

- Only those qualified to be performing electrical repairs should attempt any maintenance or troubleshooting activities.
- Do not work on energized circuits unless specifically qualified or under direct qualified supervision.
- If working near energized circuits, insulated tools and protective equipment should be used to protect oneself.

The Occupational Safety and Health Administration (OSHA) created a full presentation on electrical safety (OSHA Office of Training and Education, 2018). The most important takeaways from the presentation are the following:

- Electricity is one of the most common causes of household and workplace fires.

- Wet (environmental or sweat) conditions make working with electricity especially dangerous, because water makes for an efficient conductor when impurities like salt and acid are present (as in the case of sweat).
- Electrical shock occurs when a person acts as the ground (the conductive connection to the earth) and comes into contact with
  - both wires of a circuit,
  - one wire of an energized circuit, or
  - an energized piece of metal.
- Severity of electric shock increases with
  - the path of the electric current through the body,
  - the amount of current flowing through the body, and
  - the length of time that the body is part of the circuit.
- Risks of electrical shock include
  - electrical burns
  - fall
  - electrocution or death due to an electric shock.

    Note that an electric current passing through the body will cause the muscles to contract, meaning that if you are holding the object delivering the electric current, your hand will contract and you will be unable to release the object, such as a power tool. For that reason, do not reach out and grab something that you suspect may pose an electrical hazard.
- Hazardous conditions that can lead to electric shock include the following:
  - inadequate/improper wiring – when the current passing through a conductor is too great for that conductor to safely carry; based on the size of wire, or the wire gauge.
  - overload – when too many devices are plugged into the same circuit without proper overcurrent protection devices.
  - grounding hazards – Grounding provides a path for the current in an electric circuit to flow through the ground rather than maintaining a dangerous potential difference, or voltage; lack of proper grounding can result in electric shock.
  - overhead power lines – are not typically insulated so only authorized powerline workers should attempt to come into contact with the lines, and great care should be taken when working in close proximity with ladders or scaffolding; if working near overhead power lines, DO NOT use metal ladders, use fiberglass ladders instead.
  - flexible cords – are more vulnerable to damage and should only be used in instances where fixed wiring cannot be used instead.
- Warning signs of electrical hazards include
  - tripped circuit breakers or blown fuses;
  - warm tools, wiring, junction boxes, or connections;
  - ground-fault control device shuts off a circuit; and
  - worn, frayed, or visibly damaged insulation.
- When inspecting or maintaining any electrical equipment, be sure to DEENERGIZE all equipment first; never attempt any maintenance activities to any equipment while it remains

plugged into an outlet (unless first switching off the breaker) or powered by an external power source such as a battery.

2.4 Power vs. Energy Concept

Electric power, P, is measured in watts, or W, and can be found using the following formula:

$$P = I \times V$$

It is important to note that energy and power are not the same thing but are often confused for one another or used interchangeably. Fortunately, the difference between energy and power is not complicated, it is simply time. Power is a measure of how quickly energy can be delivered and can be calculated by dividing energy by time. This difference is why the units for energy are watt-hours (Wh), and the units for power are watts (W):

$$\frac{Energy}{Time} = Power \rightarrow \frac{Wh}{h} = W$$

2.5 Power vs. Energy Consumption

Energy consumption is measured in kilowatt-hours (kWh), where 'kilo' means 1000, and is the amount of electricity consumed or used by a household or business. Because power is equal to energy per unit time, this relationship can be rearranged to describe energy as an amount of power delivered for a given amount of time (power [kW] multiplied by time [h]). On an electricity bill, consumption charges are the term used to describe billing based on usage, in dollars per kilowatt-hour ($/kWh). Electricity bills also include demand charges, which are based on power, in kW (or the rate of electricity consumption) for set time periods throughout the day (Price, et al., 2021). Note that demand and load are often used interchangeably, both referring to the rate of electricity consumption; however, demand tends to refer to the overall rate of electricity consumption, whereas load is often used to specify an electricity-consuming device.

3.0 Generation

Figure 5 illustrates the essential components of the electric transmission and distribution system. The process begins at the generation stations, such as fossil fuel power plants, hydroelectric dams, and solar photovoltaic (PV) installations. The electricity generated at these stations first passes through a step-up transformer to increase the voltage of the electricity for long distance travel. Most plants produce electricity in alternating current (AC), but for those that produce in direct current (DC), such as PV, the electricity must first be converted to AC to pass through the transformer (see the Power Conversion section below).

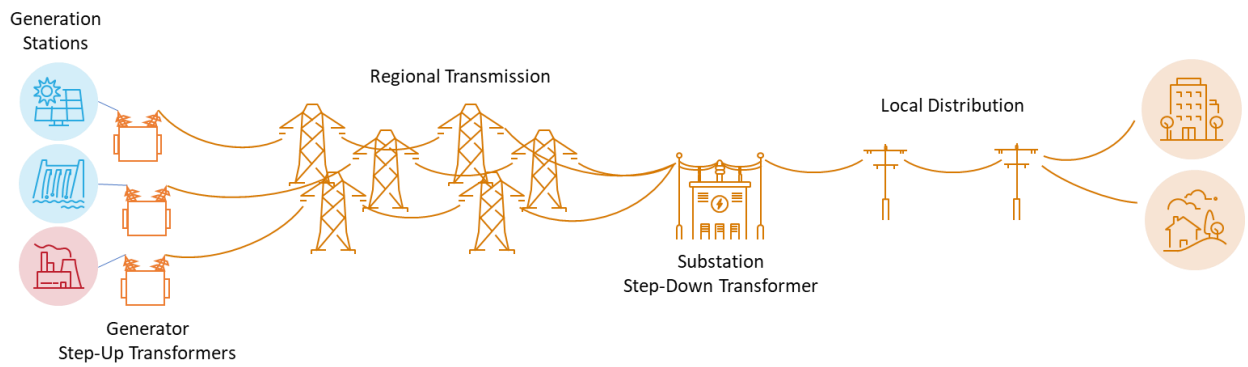

Figure 5. Left to right: generating stations, step-up transformers, transmission system, substation step-down transformer, distribution system, local consumer loads.

Once the electricity has been stepped-up to high-voltage AC, the currents are transported large distances from the generators to the local substations using high-voltage transmission lines. The longer the distance traveled, the higher voltage required to reduce transmission losses in the line. Once the electricity reaches the local substations, it again passes through a transformer, but this time a step-down transformer to reduce the voltage for local distribution. The substation then sends the electricity to local distribution lines, operating at much smaller voltages and traveling only a short distance to the individual consumers. Industrial and commercial facilities tend to operate using higher voltages than residential households, (13 kV or 4 kV compared to residential 120/240V). Distribution transformers are located adjacent to residential or industrial areas to manage the local voltages for the different consumer needs.

3.1 Types of Power Distribution and Sources of Energy Generation

The generation of electricity is primarily achieved through turbines, which can use steam, natural gas, water, or wind to rotate a magnet surrounded by copper coils (the generator), thereby inducing an electric current. In this way, turbines use a fundamental principle of physics, that a changing magnetic field induces an electric field, and vice versa. Coal-fired, biomass, geothermal, and even nuclear plants all use steam turbines. Solar electricity generation is one of the only fuel types that does not rely on turbines; instead, the photovoltaic principle is used to produce electricity from light (see Photovoltaics section).

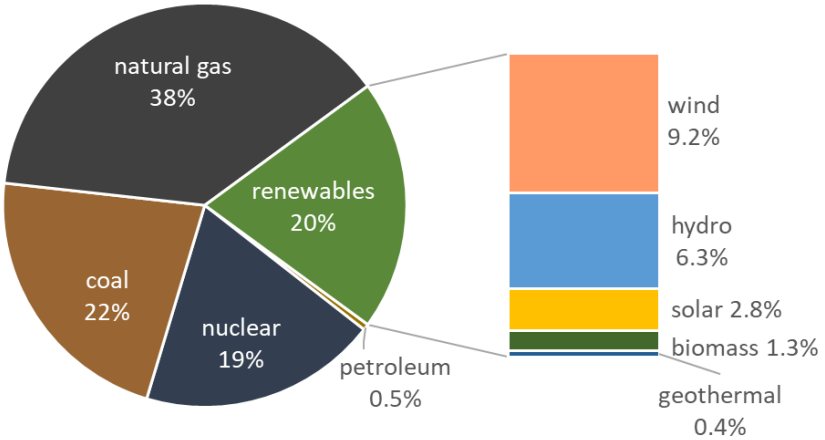

Figure 6. Electricity generation by source (U.S. Energy Information Administration).

3.2 Power Conversion

3.2.1 Why Is it Necessary?

Two mechanisms transfer electric current: direct and alternating. These current types differ primarily on their flow of current, DC flows one direction and is always constant whereas AC switches direction and can change. Electricity is often depicted like flowing water; the electrical current is the flow of the water through a tube. DC power flows in one direction, like water flowing with gravity down a drain, see Figure 7.

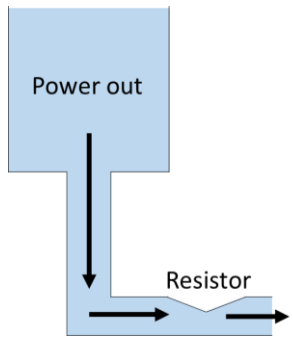

Figure 7. Direct Current Water Analogy

AC power flows in either direction, depending on different conditions. In the water analogy in Figure 8, this is depicted by a piston moving from the left to the right. Depending on the motion of the piston, the generated current moves like the water direction.

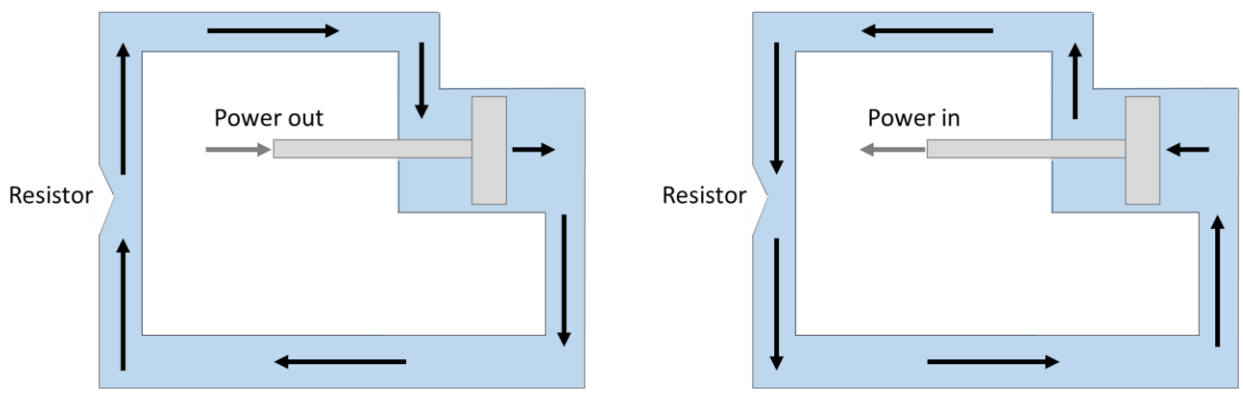

Figure 8. Alternating Current Water Analogy

DC operates as the name implies; DC remains constant with time and looks like a flat horizontal line when plotted against time. AC is also well named, as it changes with the passage of time in a wave-like or sinusoidal pattern. As AC has a sinusoidal shape, it is characterized not only by its strength (amplitude), but by how rapidly it alternates (frequency). These graphs are depicted in Figure 9.

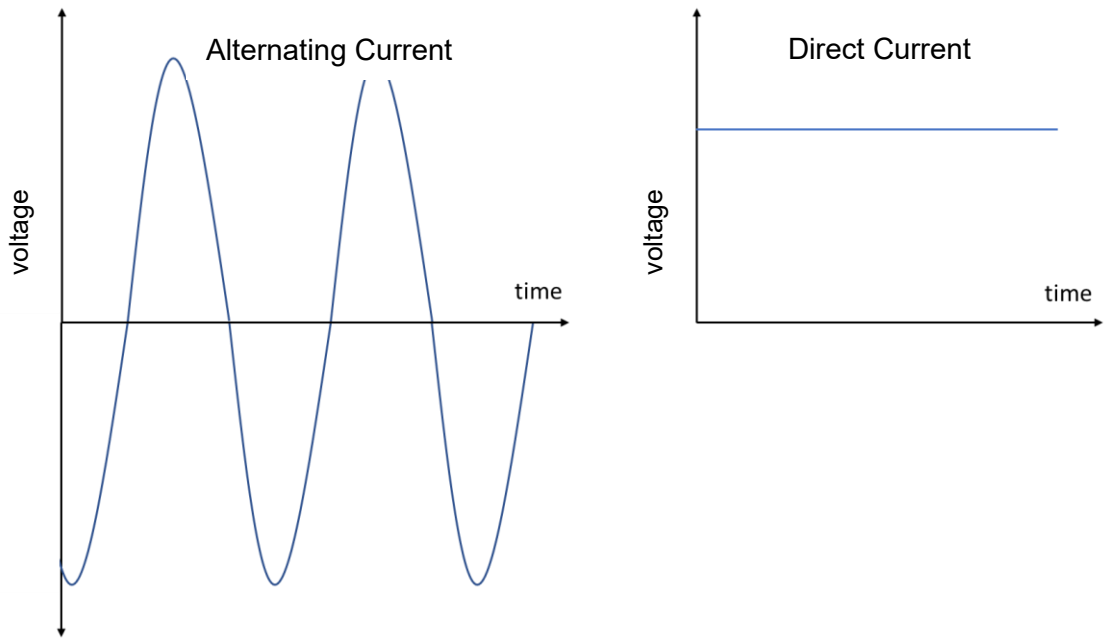

Figure 9. Alternating (left) vs Direct (right) Current

The electric system uses both current types due to their different properties. Other than the shape of the current, the most substantial difference between AC and DC is that the voltage of AC can be manipulated by a transformer, while DC cannot. DC can be changed using DC/DC converters, but not nearly as easily or cheaply as AC can by using transformers. This is a very useful property because current is transported along transmission lines at very high voltages to prevent losses in the line and is delivered at the household level at a much lower voltage. Transformers are located both adjacent to the generators to step up the voltage transported long distances and adjacent to distribution substations to step down the voltage delivered to individual buildings and households.

The conversion of AC to DC or vice versa occurs in several instances through devices called inverters. Some household appliances like incandescent lights use AC power, though devices that contain transistors require DC to operate, like laptops and video game systems, and as such have a power conversion device along the cable. These devices take the AC electricity from the outlet and convert it to DC before delivering electricity to the device.

3.2.2 Frequency and Voltage in the United States

The standard operating frequency for AC in the United States is 60 Hz, or Hertz (1/s), whereas the United Kingdom uses 50 Hz standard. Grid operators take care to maintain this frequency because electronics are easily damaged if the frequency of their electricity supply fluctuates. While this 60 Hz frequency is maintained throughout the grid, the voltage of electricity varies depending on the location.

As previously mentioned, current travels at much higher voltages along transmission lines to avoid losses. The longer the distance traveled, the higher the voltage necessary to avoid these losses. Unfortunately, the higher the voltage, the more dangerous these live wires become, and it is for this reason you can tell the voltage of a transmission line by the size of the towers. Taller towers are used to ensure the safe transfer of higher voltages by keeping the transmission lines farther from the ground. From largest to smallest towers, electricity in the United States is

transferred long distances at voltages of 765, 500, 345, and 230 kV along the transmission system. At the substation level, these voltages get stepped down and typically travel at 138 and 69 kV. The distribution-level voltages are between 7 and 13 kV. At the household level, electricity is supplied at 240 V, though this line is then split so individual outlets deliver 120 V.

4.0 Typical Household Loads

The U.S. Department of Energy published a report in 2021 entitled *Understanding Your Utility Bills: Electricity*, which is used as reference for the following sections (Messenger & Ventre, 2010), with a key depiction of residential electricity consumption by end use in Figure 10.

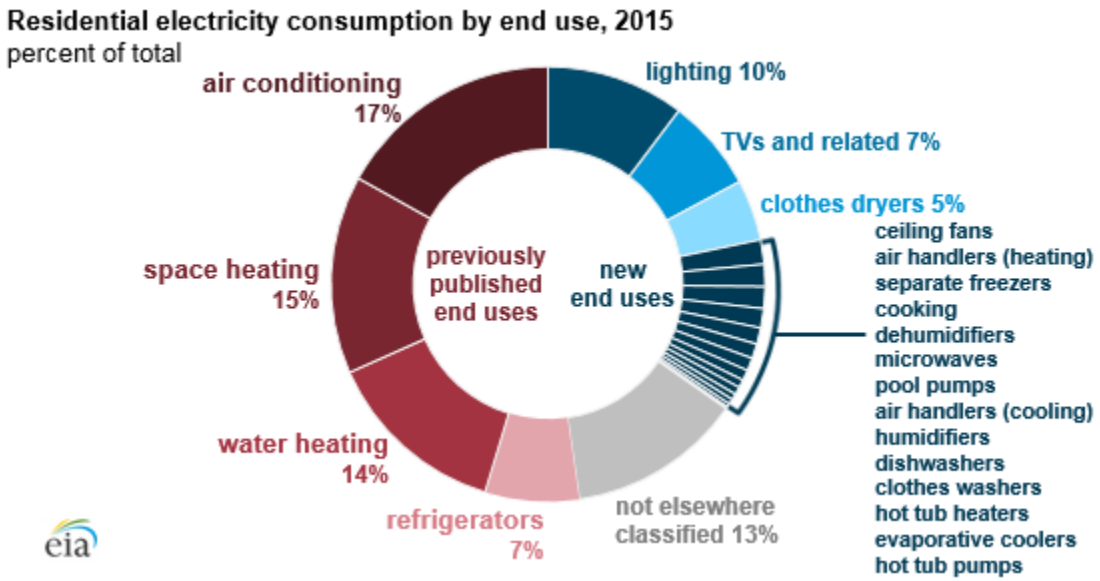

Figure 10. Typical residential electricity consumption breakdown (U.S. Energy Information Administration, 2015).

4.1 High-Demand Loads

High-demand loads are those that result from energy-intensive appliances such as washers and dryers, dishwashers, and high-performance personal computers. Because the use of these appliances amounts to a significant increase in electricity demand for a household, energy efficiency standards are used to make sure these appliances do not place undue burden on the electricity grid.

4.2 Continuous Loads

Continuous, or base loads, are the sum of the household energy uses that remain nearly constant. This is the electricity used to supply always-on appliances like refrigerators. Because these loads are predictable and consistent, they do not fluctuate with peak and off-peak demand. For these reasons, replacing old and inefficient always-on appliances can result in considerable energy savings and substantially lower electricity bills.

4.3 Impact of Load on On-Site Generation and Battery Storage

The electricity demand for a given building tends to be somewhat predictable for set time periods, such as weekdays and weekends, with some seasonal variation. Regardless of building type, the occupants typically follow predictable routines, resulting in fairly consistent usage patterns. For example, in a residential building, electricity use is at a minimum during nighttime hours while people are sleeping; peaks slightly in the morning as people wake up and make breakfast, take showers, and get ready for the day; then remains steady throughout the workday, peaking again as people return from work, make dinner, and enjoy leisure activities. While the exact demand may fluctuate day to day, the trends in use remain consistent, and are referred to as a load profile. The load profile, or pattern of electricity demand, does not tend to match directly with the electricity generation of a distributed energy resource, or generation source located within the distribution system, such as solar panels. The mismatch between generation and demand is most effectively managed using energy storage, or batteries connected to the renewable system. For example, while the sun is at its highest, excess PV generation can be used to charge batteries, and when the sun sets, those batteries can use the stored energy to meet the remaining electricity demand for the night. Figure 11, below, demonstrates this relationship.

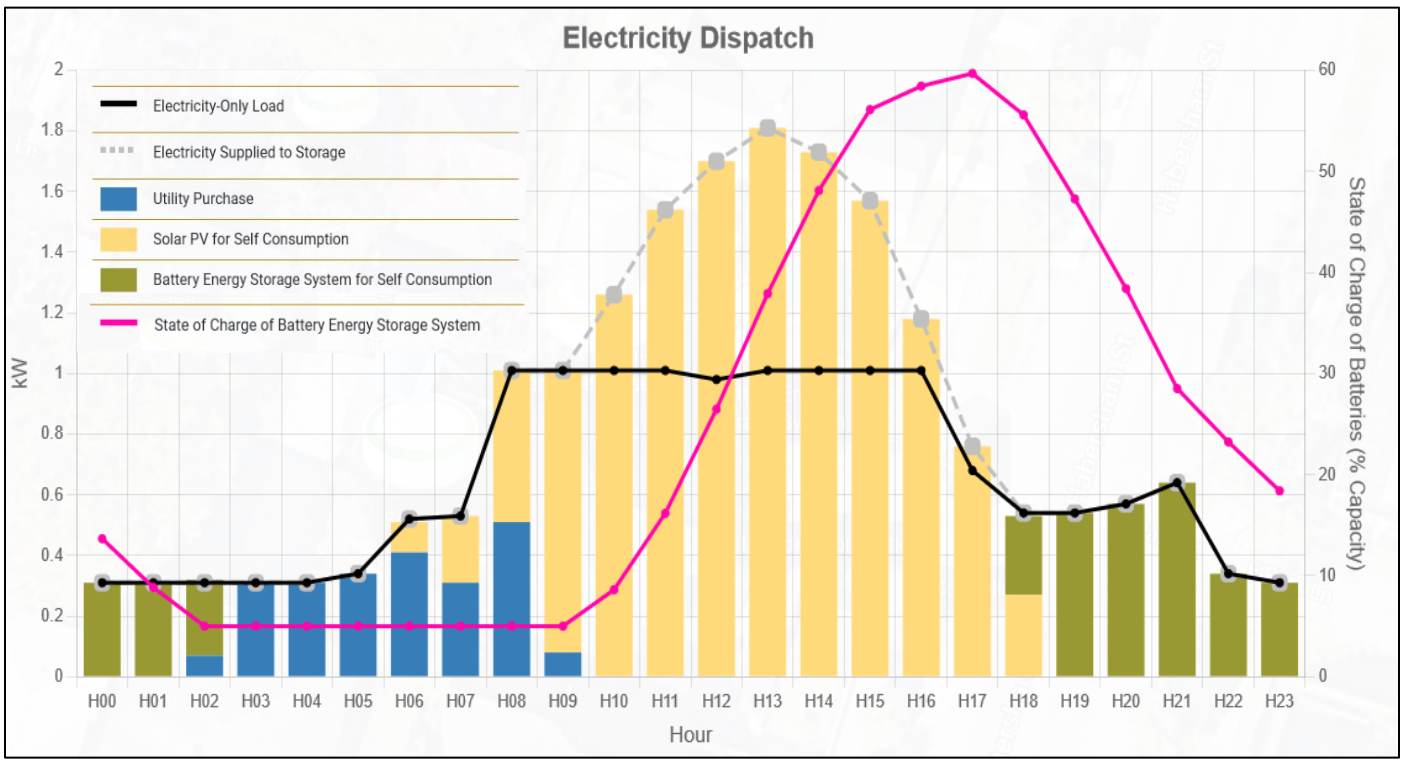

Figure 11. Electricity dispatch of a sample spring day.

The load profile for this example is represented by the black line (Electricity-Only Load) for a sunny spring day in a warm-marine climate zone in the United States. This building has a rooftop solar PV system connected to a battery energy storage system (BESS). The left axis is the electricity dispatch in kW, and the right axis measures the state of charge (SoC) of the batteries, represented by the pink line. The day starts at midnight (H00), meaning the sun has not yet risen, so demand is met by the batteries, in green (Battery Energy Storage System for Self-Consumption). At around 2 a.m. (H02), the SoC of the battery reaches a minimum, so

electricity is purchased from the utility to keep up with demand, in blue (Utility Purchase). At 6 a.m. (H06), the sun begins to rise, and the PV system begins generating energy, supplying a portion of the electricity demand until 10 a.m. (H10), in yellow (Solar PV for Self-Consumption), when it begins generating enough energy to meet and exceed the electricity demand of the residence. This excess generation is not wasted or sold back to the utility; instead, it is used to charge the battery, represented by the gray dashed line (Electricity Supplied to Storage), which leads to the battery SoC steadily rising until the sun begins to set, around 5 p.m. (H17). As the PV system stops generating, the demand is met by the electricity stored in the batteries throughout the night, until the cycle repeats the next morning.

The difference between generation of renewable resources and electricity demand is not specific to the daily mismatch of solar panels; wind patterns vary seasonally and by region, and so they too experience mismatch. The peak generation for wind turbines typically occurs during the springtime, when electricity demand is low because most consumers do not yet need to use air conditioning. This variation is why renewables are referred to as variable energy resources, and why energy storage is so important. Storing electricity in times of excess generation and low demand allows for full use of the renewable resources and avoids waste, or curtailment. For smaller renewable systems, such as residential rooftop solar, another scheme for avoiding curtailment is to export excess electricity back to the grid, selling that energy to the utility and reducing the reliance on utility power plants. System requirements, such as resilience, energy independence, and affordability, along with the utility's compensation rate for exported electricity, will help determine whether it makes more sense to pair renewable systems with batteries, to rely on grid exports for excess, or a combination of the two.

4.4 Cost of Electricity in the United States

The electricity supply to residential, commercial, and industrial buildings connected to the electricity grid is managed by an electric utility, determined by the building's service location. That utility will offer various rate structures to consumers that align with their typical usage. Rate structures, often called tariffs, describe the price of electricity, measured in $/kWh (dollars per kilowatt-hour). The term rate structure is used because electricity is not so simply priced. A rate structure includes monthly flat service charges, taxes and other charges, and the cost of electricity delivered, which often follows tiered price points based on total consumption or time of day. Typical tariff structures fall into the following categories:

- Flat Rate – Regardless of amount of consumption, electricity is purchased at a single $/kWh rate. This is a common residential rate structure, though more utilities are moving to time-of-use rates.
- Block Rate – Electricity is purchased according to tiered $/kWh pricing based on the total consumption. For example, the $/kWh price may increase after the first 500 kWh purchased, or the price may decrease past a set kWh consumption. These block rates are either increasing or decreasing, respectively, and are typically reserved for commercial and industrial consumers.
- Time-of-Use Rate – The price of electricity is variable depending on the time of day, according to the peak/off-peak schedule. Typical time-of-use rates are designed to incentivize the shifting of electricity consumption to off-peak times to relieve stress on the grid. Daytime hours are typically considered off peak and have a cheaper electricity price. Peak evening hours have more expensive pricing. Weekends are often considered off peak, corresponding to a reduced price for electricity. Time-of-use rate schedules often shift with the season to capture the difference in heating/air conditioning demand.

In addition to taxes and service charges, utility bills may also include demand charges, which are not based on the total electricity consumption, but rather the rate of electricity consumption, or power. Demand charges are calculated according to a set time window determined by the utility (typically a quarter of an hour or 15 minutes). The amount of electricity consumed in the time window is divided by the duration of that window to give the demand charge, or power in kilowatts (Price, et al., 2021).

4.5 How to Save Energy

The question of how to save energy is very common, especially for those wanting to reduce their utility bills and those wanting to reduce their impact on climate change. The short answer to the question is simply to use less of it; the difficult part to answer is how to continue comfortably living at home or operating a business with less energy. There are many strategies, all of which fall into two categories: reduce demand or increase efficiency. Some examples of these strategies are detailed below.

Reducing demand can be achieved through behavioral changes or via devices such as timers. Behavioral changes include remembering to turn off the lights when leaving a room, always closing the doors and windows if the air conditioning is on, opening the windows for cooling if the weather is favorable, setting the temperature a degree or two above or below what is most comfortable, not having the porch lights on all night, and so on; all of these reduce the total electricity demand of a household or business. There are many helpful devices that can reduce demand without changing behaviors; for example, if you want to reduce your bills but always forget to turn the lights off, installing a timer or motion sensor to automatically turn off the lights if no one is in a room is a great way to reduce demand.

4.6 Energy Efficiency

Energy efficiency is a means of reducing demand while still benefiting from the function of electricity. This is achieved by using energy-efficient appliances, or appliances that require less energy to perform the same task as an older or less efficient appliance. Energy efficiency ratings are commonly provided by EnergyStar and are posted as a yellow “Energy Guide” sign on purchased appliances. These energy guides include both the estimated electricity cost of one year of that appliance’s use as well as the estimated annual electricity consumption in kWh. This is a useful tool when comparing appliances for purchase. The upfront cost of a less efficient appliance may be cheaper, but the more efficient appliance will likely cost less over the product’s lifetime, both in dollars and kWh.

Energy efficiency is also a building design strategy used during initial architectural design or via building upgrades. Insulation, window and door sealing, and ventilation strategies allow buildings to maintain the desired indoor temperature while reducing heating and cooling reliance. Architecturally efficient building designs rely on passive solar heating. This method uses the south-facing side of a building to absorb and disperse the sun's heat according to seasonal needs. There are many energy efficiency strategies that may be appropriate for a given location; a building energy audit is used to prioritize among them. A trained professional will assess the building's energy consumption, design, and present condition, then recommend worthwhile efficiency measures. Many utility companies will pay for energy audits in the hopes that recommended efficiency measures will reduce load (Office of Energy Efficiency & Renewable Energy, 2022).

5.0 Photovoltaics: How Does it Work?

Photovoltaic (PV) cells generate electricity using sunlight. The sun emits photons, which carry discrete quantities of energy, E_p, in the form of light. The energy of a photon is determined by its wavelength or frequency according to the equation:

$$E_p = \frac{hc}{\lambda} = h\nu$$

where h is Planck's constant and c is the speed of light, roughly 3 x 10^8 m/s. λ, the Greek lowercase letter lambda, is the wavelength of the photon, and ν, the Greek lowercase letter nu, is the frequency of the light.

Photons travel from the sun and through the Earth's atmosphere to strike a PV cell on a solar panel. PV cells are made of semiconductors, which are materials characterized by having a valence band of energy E_v and a conduction band of energy E_c. The difference in energy between these bands is called the bandgap energy, E_g.

The relationship between these energy levels is shown in Figure 12. When the photon reaches the PV cell, it strikes an electron in the valence band, transferring its energy to that electron. If the photon carried equal or more energy than the bandgap energy, that electron is said to be excited, traveling from the valence band, across the band gap, and into the conduction band. An electron in the conduction band then travels (or is conducted) through the connected circuit of the PV panel, generating energy. Different semiconductors have different material properties, and the exact makeup of a semiconductor determines the band gap energy of its PV cells. Common semiconductors used for PV panels are crystalline silicon (c-Si), gallium arsenide (GaAs), and cadmium telluride (CdTe), though there are many more semiconductors being used or studied for use in solar panels (Jager, et al., n.d.).

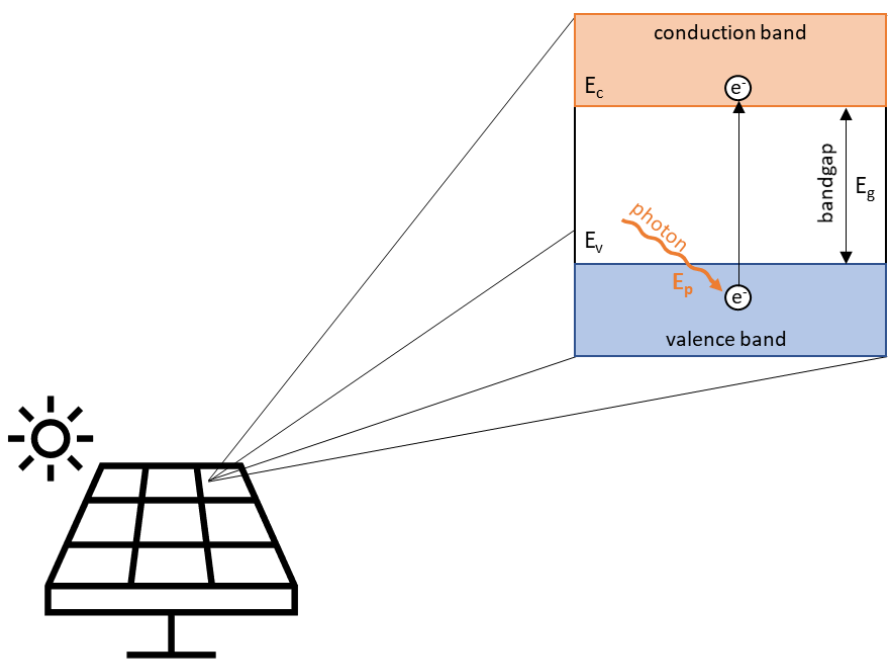

Figure 12. Diagram of a photovoltaic panel.

5.1 What is a PV panel?

The fundamental component of a PV system is the solar cell, made of a semiconducting material. Individual solar cells are arranged in a grid pattern and wired together to form a PV module. PV modules are typically assembled within an aluminum frame and layered from top to bottom: front glass, front encapsulant, solar cells, back encapsulant, and back layer, which are laminated together and then connected to a junction box containing all the wiring for the module. PV modules are positioned side by side and wired together to form a panel. Many connected panels form a PV array, the largest unit of a PV system. The relationship between cell, module, and panel is shown in Figure 13.

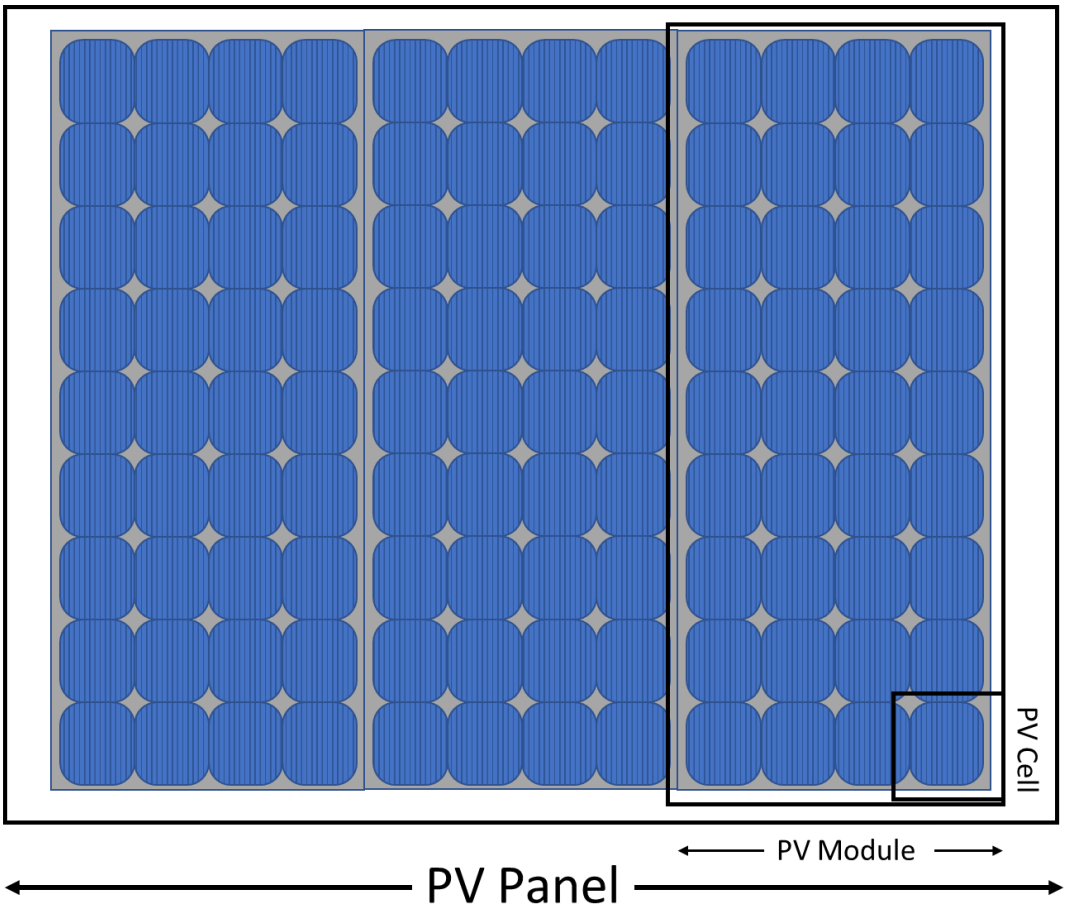

Figure 13. Relationship between solar cell (single unit), module (36 cells), and panel (three modules).

5.2 Series and Parallel

PV components can be wired together in series or in parallel. Connecting solar cells or modules in series results in a system voltage equal to the sum of the voltages of the individual components, but the same overall current. Solar cells, modules, or panels connected in series are called strings. Connecting in parallel, on the other hand, preserves the voltage of the individual components, but the system current is now the sum of the individual currents. Wiring components in parallel or series is used to control the overall system parameters. This relationship is depicted in Figure 144.

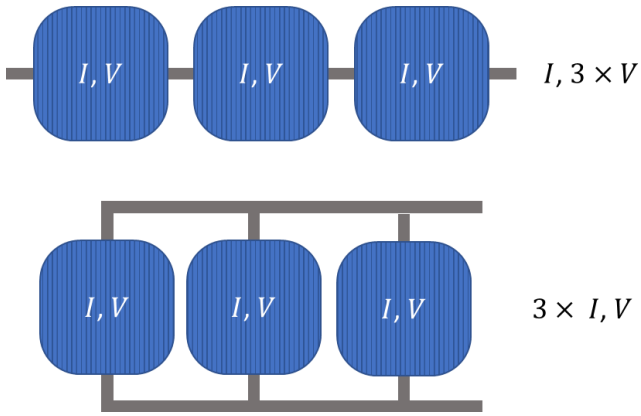

Figure 14. Solar cells wired in series (top) and parallel (bottom).

5.3 IV Curve, Maximum Power Point

The I-V curve is the fundamental method of measuring the performance of a solar cell, module, panel, or array. The I-V curve is a plot of the PV's current in amps, A, on the y-axis and the voltage in volts, V, on the x-axis. All I-V curves have the same general shape, a roughly horizontal line from the y-axis that eventually slopes downward to the x-axis. The size and steepness of I-V curves vary based on irradiance, or light intensity, and temperature. Increased irradiance increases the current and slightly increases the voltage, and increased temperature reduces the voltage, as shown in Figure 155.

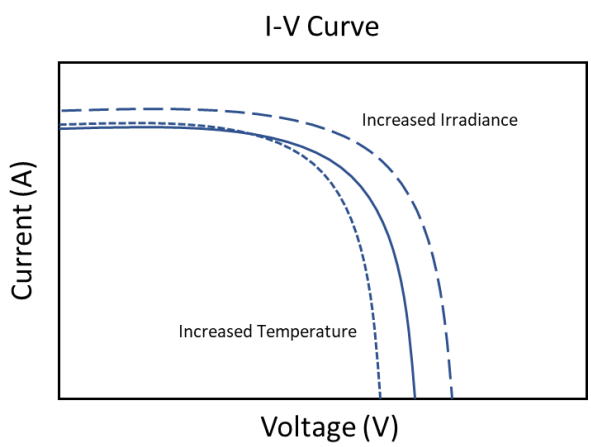

Figure 15. I-V curve dependence on temperature and radiance vs. baseline.

The instantaneous power output of a PV system is the product of current and voltage at a point in time. The maximum power point is the operating point at which the current and voltage maximize the power. Because this is the most productive state of the system, it is advantageous to make sure that the PV remains at the same current and voltage that results in the maximum power via maximum power point tracking. Typically, holding either the current or the voltage at the desired level ensures the system operates at its maximum point. The tracking component of this process comes into play because the temperature and irradiance on a solar panel do not

remain constant throughout the day, so the current or voltage must be adjusted in response to these changes.

5.4 Charge Controller

A charge controller is used for PV systems connected to battery energy storage devices. Charge controllers control the charging rate and ensure the batteries do not become overloaded or fully depleted. Charge controllers prevent PV panels from delivering excess power to the batteries when they reach a full SoC, either by stopping PV generation or by exporting the excess power to the grid instead. Charge controllers also prevent batteries from fully discharging (or discharging past a set limit) their stored energy when the PV system is not able to supply the full load.

5.5 Inverter

The power generated by a PV system is DC. The electricity delivered by the electric grid, however, is AC. To connect a PV system to a building, household, or load using AC electricity, an inverter is required. The purpose of an inverter is to simply convert DC power generated by the PV panels to AC electricity.

5.6 Lifetime

Today's PV modules have an expected lifetime of more than 25 years and are designed to withstand most environmental stresses. Undue stress, however, can shorten the lifetime of a system. The stressors a PV module is designed to withstand and against which they are tested for quality are: temperature, mechanical (such as hail, dust, debris, wind), moisture, humidity, and irradiance (ultraviolet radiation can damage many components of a PV modules).

5.7 Funding Structure

PV systems are large installations that generate electricity for 25 years or more from the date of installation. The owner can use PV electricity generation to offset utility bills or to sell it back to the utility for a profit. Because of the high upfront cost, maintenance costs, long lifetime, and various operating strategies of PV systems, lifecycle cost is the best financial metric for discussion. Lifecycle costing considers all costs of ownership and operation for the estimated lifetime of a system and translates each into their present worth by considering inflation and interest rates to determine the total lifecycle cost of the system. When comparing systems and making long-term financial decisions, it is important to consider both the upfront cost of installation and the total lifecycle cost, both are important when assessing the financial viability of an installation.

The upfront and lifecycle costs of a PV system are used to determine which ownership and financing structure are most appropriate, whether for a residential rooftop or commercial installation. There are two main ownership types: direct or third party. Direct ownership is when the landowner purchases the system, either with available funds or via loans. In most instances, to benefit from state and federal rebates and incentives, the user must own the system directly. The Database of State Incentives for Renewables & Efficiency (DSIRE) is a great resource for exploring all potential rebates and incentives. Third-party ownership offers a unique opportunity to avoid initial upfront and maintenance costs of solar systems by outsourcing to another company. There are two main systems of third-party ownership. The first is a solar lease,

whereby the solar leasing company handles installation, ownership, and maintenance of the system. The home or business owner then houses the PV system and consumes the electricity it produces, while paying a lease for its use. The other type of third-party ownership is a power purchase agreement, which is very similar to a solar lease. Instead of paying for the lease and enjoying the electricity produced, the user pays the contracted owner/operator for the produced electricity without the terms of a leasing agreement (Messenger & Ventre, 2010) (Hausman, 2018).

6.0 Energy Storage

This Energy Storage Resource Material report was created as part of Pacific Northwest National Laboratories' (PNNL's) Technical Assistance Program provided under the Energy Storage for Social Equity (ES4SE) Initiative. Generated for the Coast Electric Power Association to help leverage existing and future projects, it was written to be accessible to audiences of varying backgrounds, requiring no previous experience in energy storage. This Energy Storage Resource Material is intended to provide Energy Storage for Social Equity communities with an educational reference document for their community members as they consider, procure, and deploy systems that include battery energy storage technologies.

This Energy Storage Resource Material report provides an overview of different types of energy storage—mechanical, chemical, and thermal—the benefits and uses of energy storage technologies, and a discussion of how energy storage can be used as an equity asset. It then focuses on battery energy storage technologies, describing their operation within a circuit, the effects of the charge/discharge cycle on voltage, the difference between the state of charge and voltage, how to measure battery capacity, and what is meant by the C-rate, or charging/discharging rate. This operational overview is followed by descriptions of the most common types of battery energy storage technologies, including lithium-ion, nickel-manganese cobalt, lead-acid, absorbed glass mat, and gel-based batteries. The maintenance and control procedures for the different battery technologies, and the battery housing enclosures, structures, and HVAC are described. The document concludes with an overview of the safety and risks associated with the two most common battery types: lithium-ion and lead-acid batteries.

6.1 Types of Energy Storage

Energy can be stored in a variety of ways: mechanical, chemical, electrochemical, and thermal. Mechanical energy storage systems (ESS) use the principles of physics to store energy for later use. In a mechanical storage device when a system has excess energy it needs to store, it can use electricity to spin the rotor of a flywheel energy storage system. When the system needs that energy back, the already spinning flywheel will begin generating electricity by converting its rotational energy into electricity. Another mechanical way to store energy is by compressing air. A compressed air energy storage system simply uses excess energy to compress air to high pressure, which is then released when that energy is needed. Pumped storage hydropower, depicted in Figure 16, involves the storage of hydroelectric energy. By utilizing two water reservoirs at different elevations, power can be generated as the water moves down from one to the other passing through a turbine; it can also store power in the upper reservoir and then release it when needed.

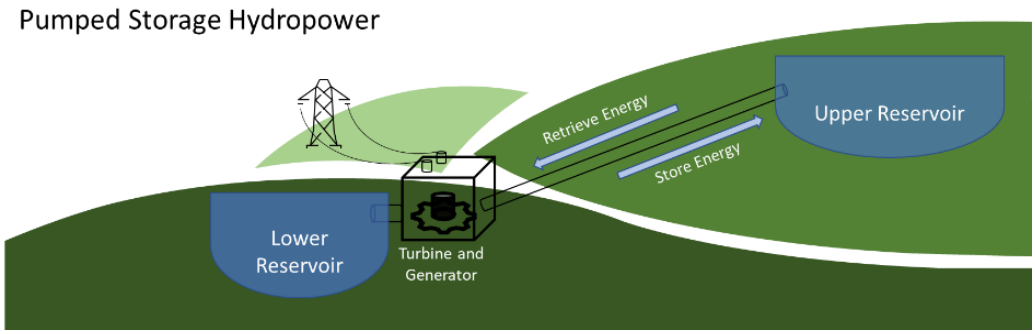

Figure 16. Pumped storage hydropower.

Chemical energy storage takes advantage of the high energy density of certain chemicals, most notably hydrogen. Hydrogen can be stored in liquid form, compressed into a gas, or stored within a chemical compound. Hydrogen can be difficult and expensive to store and transport, but its high energy density makes it extremely valuable for either direct use (chemical) or for use in fuel cell technologies (electrochemical). Fuel cells generate electricity through the reaction of two chemicals: a fuel (hydrogen) and an oxidant. Fuel cells are very similar to batteries except that batteries are self-contained electrochemical devices, and fuel cells need reactants continuously pumped in for the electrochemical reaction to occur. This also means that while the lifetime of a battery is limited by the amount of chemical reactants it can store, a fuel cell can continue to operate as long as reactants are supplied.

Thermal energy storage involves the storage and retrieval of thermal energy from either a hot or cold source for later use. The amount of thermal energy able to be stored from a source depends on how efficiently the storage device can contain the thermal energy (Kalaiselvam & Parameshwaran, 2014). Thermal energy can be stored in natural features such as bodies of water or the earth as well as chemical compounds and manufactured materials. Thermal energy storage can be used for space heating or cooling, air conditioning, and even industrial processes. Thermal energy storage technologies are categorized as either active systems, which require mechanical assistance like pumps or fans to either store or redirect thermal energy, or passive systems, which rely only on the physical processes of convection or buoyancy to conduct thermal energy (Kalaiselvam & Parameshwaran, 2014). The energy from the sun is an abundant source of heat, and the basis of many thermal energy technologies, such as solar water heaters and solar thermal collectors.

6.2 Benefits and Use of Energy Storage

The grid services that an energy storage asset is capable of providing depend on where it is located within the electric grid (utility-level, in-front-of, or behind-the-meter), who owns it (merchant, utility, consumer/community), the control system capabilities, and the regulatory framework and market structure that it must operate within. Table 1 describes the services that ESS can provide, organized by grid service type into the following categories: bulk energy services, ancillary services, transmission services, distribution services, and customer services. Table 1 (Balducci, et al., 2018) describes the services that ESS can provide, organized by grid service type into the following categories: bulk energy services, ancillary services, transmission services, distribution services, and customer services.

Table 1. Benefits of energy storage systems (Balducci, et al., 2018).

Category	Service	Value/Description
Bulk Energy	Capacity or Resource Adequacy	An ESS is dispatched during high-demand events to supply energy and assist in providing power to the grid, referred to as shaving peak energy demand. The ESS reduces the need for high-polluting power plants dedicated for peak energy events and other peaking resources.
	Energy Arbitrage	Trading in the wholesale energy markets by buying energy during off-peak low-price periods and selling it during peak high-price periods.
Ancillary Services	Regulation	An ESS operator responds to an area control error in order to provide a corrective response to all or a portion of a control area. These responses correct differences between load and generation.
	Load Following	Regulation of the power output of an ESS within a prescribed area in response to changes in the grid such as system frequency, tie line (transmission circuit) loading, or the relation of these to each other. This maintains certain grid characteristics such as the scheduled system frequency and/or established interchange with other areas to stay within predetermined limits.
	Spin/Non-Spinning Reserve	Spinning reserve represents energy generation capacity that is online and capable of synchronizing to the grid within 10 minutes. Non-spin reserve is off-line generation capable of being brought onto the grid and synchronized to it within 30 minutes.
	Frequency Response	The ESS providing energy to maintain frequency stability on the grid when it deviates outside the set limit, thereby keeping generation and load balanced within the system.
	Flexible Ramping	Ramping capability provided in real time to meet the forecasted net load to cover upward and downward forecast error uncertainty.
	Voltage Support	Voltage support consists of providing reactive power onto the grid to maintain a desired voltage level.
	Black Start Services	Black start service is the ability of a generating unit to start without an outside electrical supply. Black start service is necessary to help ensure the reliable restoration of the grid after a blackout.
Transmission Services	Transmission Congestion Relief	Use of an ESS to store energy when the transmission system is uncongested and to provide relief during hours of high congestion
	Transmission Upgrade Deferral	Use of an ESS to reduce loading on a specific portion of the transmission system, thereby delaying the need to upgrade the transmission system to accommodate load growth or regulate voltage.
Distribution Services	Distribution Upgrade Deferral	Use of an ESS to reduce loading on a specific portion of the distribution system, thereby delaying the need to upgrade the distribution system to accommodate load growth or regulate voltage.
	Volt-Var Control	Volt–amperes reactive (VAR) is a unit used to measure reactive power in an alternating current (AC) electric power transmission

Category	Service	Value/Description
		and distribution system. VAR control manages the reactive power, usually attempting to get a power factor near unity.
	Conservation Voltage Reduction	Use of an ESS to reduce energy consumption by reducing feeder voltage.
Customer Service	Power Reliability	Power reliability refers to the use of an ESS to reduce or eliminate power outages to customers.
	TOU (Time of Use) Charge Reduction	Reducing customer charges for electric energy when the price is specific to the time (season, day of week, time of day) when the energy is purchased.
	Demand Charge Reduction	Use of an ESS to reduce the maximum power draw by electric load in order to avoid peak demand charges.

6.3 How Is Energy Storage an Equity Asset?

ESS, when affordable, available, and distributed equitably throughout the electric system, are considered an equity asset. Energy storage can be located within a community and designed to deliver electricity to community members during times of peak electricity demand, which usually occurs between 5:00 and 8:00 p.m. on weekdays. Around this time, people get home from work, start making dinner, doing laundry, running the dishwasher, and generally use more electricity in their homes than earlier in the day. Depending on the utility, customers may be charged a higher price for using electricity during these times of peak demand. Having ESS designed to deliver electricity during peak hours can help customers avoid paying these increased peak electricity rates.

Utilities tend to charge a higher price for electricity during peak demand because they must power on their more expensive plants to ensure everyone has an adequate supply of electricity. These more expensive plants, called peaker plants, are historically located in lower-income communities and tend to be powered by fossil fuels, emitting large quantities of greenhouse gases. An ESS, when deployed during peak demand, can supply this additional electricity, and in some cases completely prevent the peaker plants from turning on. There are even examples of peaker plants being replaced by ESS, such as in Pacific Gas and Electric's Oakland Clean Energy Initiative (Tarekegne, et al., 2021). Peak demand is usually highest during the hottest hours of the summer when air-conditioning units are working overtime to keep everyone cool, and air quality tends to be at its worst due to smog and increased temperatures. Reducing reliance on these expensive, polluting peaker plants not only cuts consumer costs on utility bills, but also preserves air quality at times when it is especially critical to do so.

Energy storage can also increase a community's resilience to power disruptions and extreme weather events. Power outages that cause residents to rely on expensive and polluting diesel backup generators or even go without power for lengthy periods of time can be mitigated with the use of energy storage solutions. Reducing the occurrence and duration of power outages saves consumers money on fuel for backup generators, prevents revenue losses of small businesses, and avoids the negative health impacts from unpowered medical devices, lack of heat/air conditioning during extreme temperatures, and food spoilage.

When ESS are community-owned, they even present an opportunity for community wealth-building and wider socioeconomic benefits. Community-owned storage units can generate revenue when they dispatch electricity to the grid in place of utility-owned generating units. Community-owned ESS can allow for more renewables to be developed in the area as well,

because renewables require the use of energy storage for full utilization due to the variable nature of their electricity generation—solar panels generate electricity during the day, but a significant amount of electricity demand occurs after the sun has set, so storage bridges this gap. Energy storage, when equitably distributed, has the capacity to save communities money on their utility bills, prevent unnecessary pollution and improve air quality, bolster the resilience of the electricity grid, and keep communities healthy and comfortable.

6.4 Battery Energy Storage

The following sections describe the components of a battery and their operation, including: voltage variation during charging or discharging, the state of charge and storage capacity, and the charging and discharging rates.

6.4.1 Batteries: How Do They Work?

A battery is a contained system, or cell, that produces electricity via two electrodes (conductive metals) connected through an electric load (wired to complete a circuit) and an electrolyte (usually a liquid medium that allows the flow of ions or electrons, known as charge carriers). A metal is determined to be conductive if it facilitates the flow of electricity by conducting electrons, which carry electric current. This type of cell is referred to as both a galvanic cell after Luigi Galvani and a voltaic cell after Alessandro Volta. Batteries and fuel cells are both galvanic cells; the main difference between the two is that batteries are sealed and have only the limited amount of fuel contained within them, and fuel cells do not have a limited lifetime as long as they receive a steady supply of chemical reactants, or fuel, pumped both into and out of the cells. Batteries can also be rechargeable if the reaction is reversed to restore the battery to its initial conditions. Note that not all batteries are designed to be rechargeable.

Batteries produce electricity when the two electrodes are made of different conducting metals with different electrochemical properties, specifically potential difference, which is measured in volts. By submerging two metals within an electrolyte, like saltwater, and connecting the electrodes with wire to form a circuit, the potential difference between the metals causes an electrochemical reaction. The flow of ions from one metal electrode to the other then produces electricity (see Figure 17).

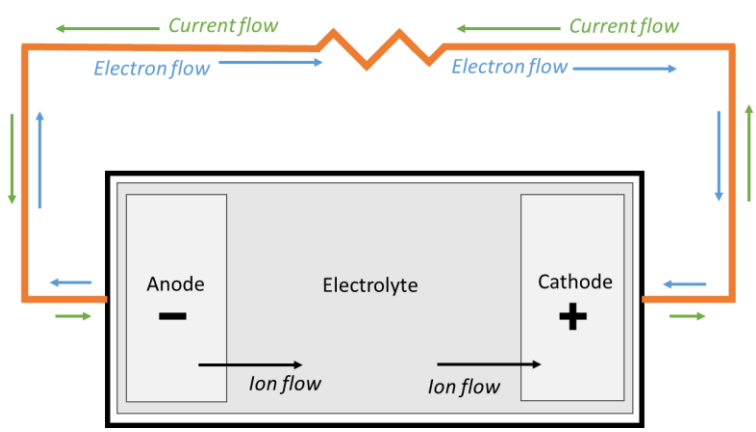

Figure 17. Diagram of battery operation in a connected circuit.

The more different the electrochemical properties of the two metals, the larger the potential difference and greater the voltage of the battery. When thinking about an electric circuit, the flow

of a river is a useful metaphor: the voltage (measured in volts) of the battery is what pushes the water down the river, the current (measured in amps) is a measure of the flow of the river, and the resistance (measured in ohms) is a measure of how difficult it is for the river to flow—a smaller resistance is like a wider river where water can flow more easily.

6.4.2 Voltage Variation with Charging/Discharging

The difference between the metal electrodes is known as an electric potential, measured in volts. The greater the difference, the higher the potential, or voltage rating, of the battery. When a battery is used to power a device, it is said to be discharging its electric potential. For example, a 12 V battery, when connected to a circuit and used to power electric devices, will slowly lose voltage as it produces electricity with the flow of electrons. The greater the discharge current, the greater the loss in voltage. If you measured the voltage of that 12 V battery with a voltmeter or multimeter at full capacity, it would read slightly above the specified level, at 12.7 V, but after it was used all day, it would read at a lower voltage, perhaps 12.6 V. While the battery voltage is reduced by discharge, it does not change substantially because the metal electrodes are still intact—the difference is primarily due to the flow of electrons.

To charge a battery, you simply connect it to a power source, which causes the electrons to reverse direction and move back to the higher-potential electrode. This causes a battery with a reduced voltage to start measuring greater and greater voltages until it is fully charged and back to the original voltage, in our example 12.7 V. Figure 18 shows the flow of electrons in both charging and discharging a battery.

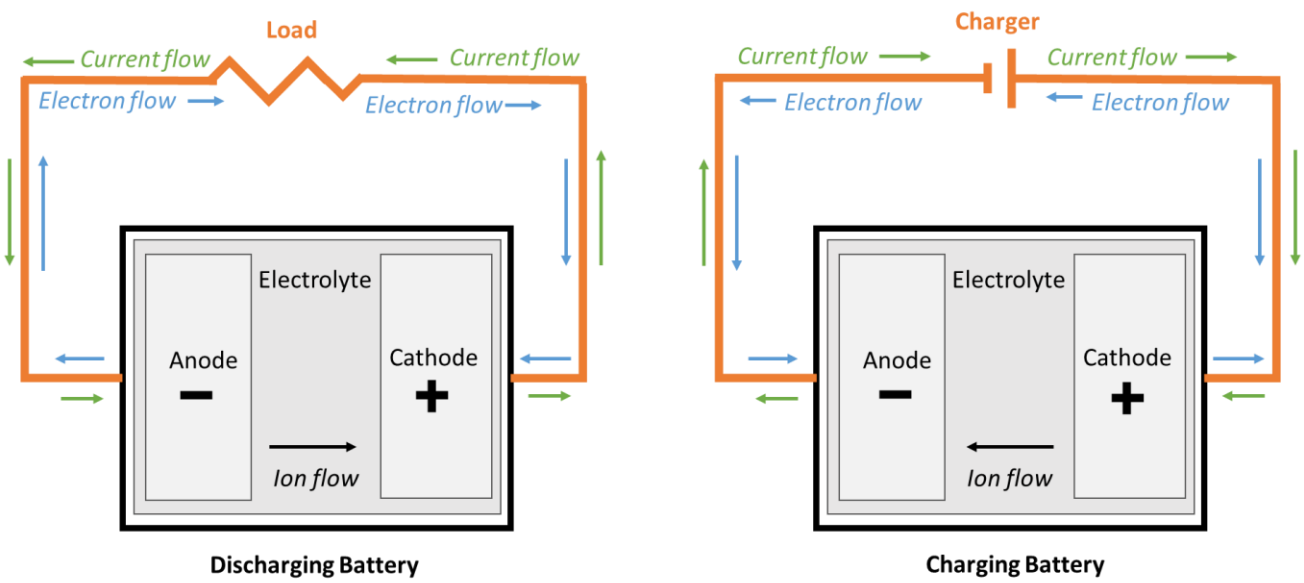

Figure 18. Diagrams comparing the discharging (left) and charging (right) process of a battery.

6.4.3 State of Charge vs. Voltage

The state of charge, or SoC, is a measure of the percentage of the battery's capacity that is available for use. A fully charged battery has a 100 percent SoC, and a fully depleted battery has a 0 percent SoC. The depth of discharge, or DoD, is a measure of how much of the battery has been used, also measured as a percentage. The DoD and SoC are complementary. A fully charged battery with a 100 percent SoC has not been discharged at all, so it has a 0 percent

DoD. A fully depleted battery has been fully used, so it has a 100 percent DoD and a 0 percent SoC. The SoC and the DoD will always add up to 100 percent. While the voltage does change with charging and discharging, the change is relatively small, so the SoC is used as a simple measure of the battery's available capacity, from 0 to 100 percent.

6.4.4 Battery Capacity

The capacity of a battery is a measure of the amount of chemically active material a battery contains, calculated based on the weight of the metal electrodes and measured in amp-hours, or Ah (Petrovic, 2021). The total energy of a battery is measured in watt-hours, or Wh, which can be found by multiplying the voltage of a battery by the battery's capacity, like so:

$$Wh = V\ x\ Ah$$

It is important to note that energy and power are not the same thing but are often confused for one another or used interchangeably. Fortunately, the difference between energy and power is not complicated, it is simply: time. Power is a measure of how quickly energy can be delivered and can be calculated by dividing energy by time. This difference is why the units for energy are Wh and the units for power are watts, or W, as shown below:

$$\frac{Energy}{Time} = Power \quad \rightarrow \quad \frac{Wh}{h} = W$$

6.4.5 Discharging/Charging Rate

The rate of charging/discharging a battery is known as the C-rate. This is an industry standard, but the units can be confusing. To calculate C-rate, divide the current used to charge/discharge a battery by the battery's capacity, in Ah. Then, drop the units and express the answer as a fraction. For example, charging a battery with a capacity of 100 Ah with a constant 10A current would have a C-rate of C/10 or 0.1C, because

$$C\ rate = \frac{10A}{100Ah} = \frac{C}{10} = 0.1C$$

The unit of time is ignored so that the C-rate can be given as the ratio C/10.

6.5 Types of Battery Energy Storage

Batteries can have many different chemistries, such as lithium-ion, lithium-iron-phosphate, nickel-manganese-cobalt, lead-acid, flooded lead-acid, sealed lead-acid, absorbed gel mat, and gel batteries, each of which is described below.

6.5.1 Lithium Ion

Lithium-ion batteries are the most common type of lithium battery and were developed as a safer alternative to lithium-metal batteries. Lithium-ion batteries are safer than lithium-metal batteries because the lithium electrode is not made of metallic lithium, which is too electrochemically active to be safe in most applications. The electrode is instead made of lithium ions embedded within a support framework like graphite or other carbon-based materials. Lithium ions are simply lithium atoms that have lost an electron to become positively charged

and are written as Li+. Because these lithium ions are not neutral atoms and have a charge of +1, they act as charge carriers when the battery is connected to a circuit, allowing lithium-ion batteries to supply a voltage due to the potential difference between the electrodes, depicted in Figure 19. The other electrode in a lithium-ion battery can be made of many different materials, allowing for various battery chemistries, each with a different set of operating characteristics. It is important to choose the lithium-ion battery chemistry that is the most appropriate for your application. The most common lithium-ion battery chemistries are lithium cobalt oxide (LCO), lithium manganese oxide (LMO), lithium nickel, manganese, cobalt (NMC), lithium nickel, cobalt, alumina (NCA), and lithium iron phosphate (LFP). Table 2 (Battery University, 2022) gives an overview of the different battery chemistries.

Table 2. Battery chemistry, characteristics, and applications.

Battery Chemistry	Operating Characteristics	Common Applications
LCO	High energy but lower power	Cell phones, laptops, cameras
LMO	High power but lower capacity	Power tools, medical devices
NMC	High power and capacity but less stable	Electric vehicles, electric bicycles, industrial applications
NCA	High energy but less stable	Tesla electric vehicles, medical and industrial applications
LFP	High cycle life and stability but lower energy	Vehicles (combustion and electric), stationary energy storage

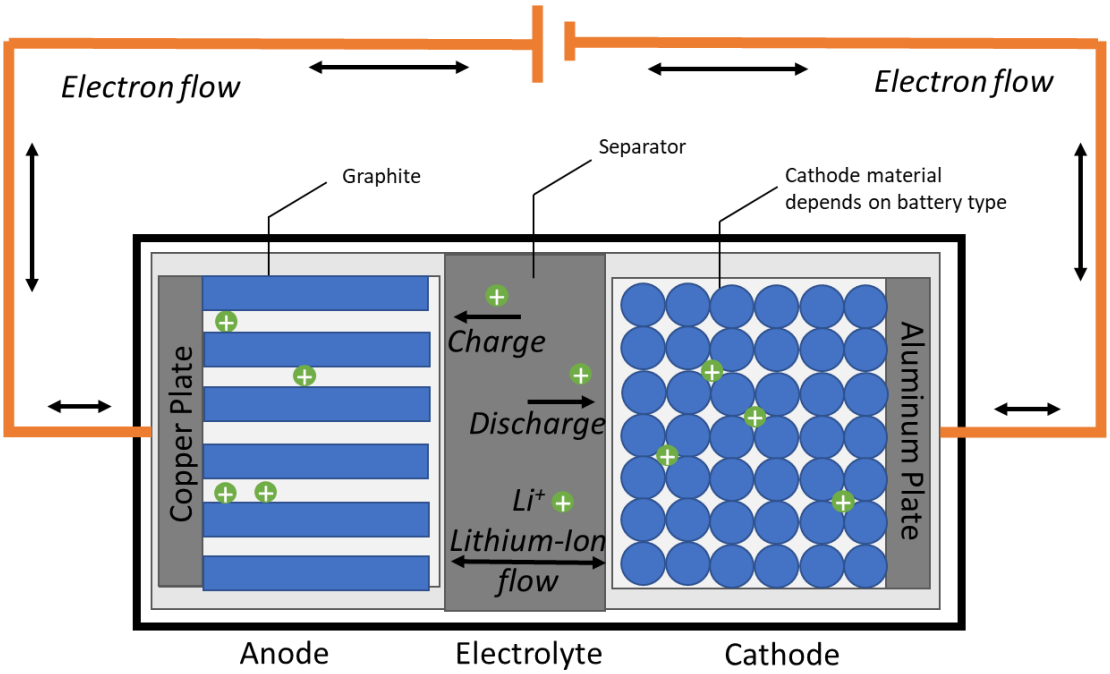

Figure 19. Diagram of lithium-ion battery components and operation within a circuit.

6.5.2 Lithium Iron Phosphate

LFP batteries are the safest and most common lithium-ion battery on the market today. They are capable of operating safely at higher temperatures and are designed to have minimal fire risk. LFP batteries have an extremely long cycle life, which in combination with their high safety, make them a very popular battery choice.

6.5.3 Nickel Manganese Cobalt

Lithium-ion batteries with NMC electrodes are the safer versions of LCO batteries because the addition of nickel and manganese make the electrode more stable. NMC batteries are commonly used in electric vehicles, bicycles, and in industrial applications. These batteries have high power and a long cycle life but are not as stable as LFP batteries.

6.5.4 Lead-Acid

Lead-acid batteries, abbreviated as LABs, are the oldest commercially available battery chemistry and are still widely used today. Lead-acid batteries have one lead, and one lead-dioxide electrode and sulfuric acid is used as the battery's electrolyte. The most commonly used LABs are found in combustion vehicles because they are inexpensive, durable, have high cell voltage, and can handle high discharge currents, or C-rates. While widely used in vehicles, LABs are less well-equipped for applications requiring high cycle lives and increased temperatures.

6.5.5 Flooded Lead-Acid

Flooded LABs are so named because the electrodes are fully submerged in the sulfuric acid electrolyte. Flooded LABs, or valve-regulated LABs, have a small vent in the cap that is open to the air to allow excess gas produced by the reaction to escape. Sulfuric acid is highly corrosive, meaning flooded LABs are very dangerous if punctured and must be reserved for applications that do not pose physical risk to the battery housing, and they are subject to strict transportation restrictions.

6.5.6 Sealed Lead-Acid

Sealed LABs are aptly named for their difference from flooded LABs, which have an air vent open to the environment, shown in Figure 20. Sealed LABs do not lose any electrolyte due to evaporation, off-gassing, or spillage as in the case of flooded LABs. This difference in design makes sealed LABs safer, more widely applicable, and give them a longer cycle life.

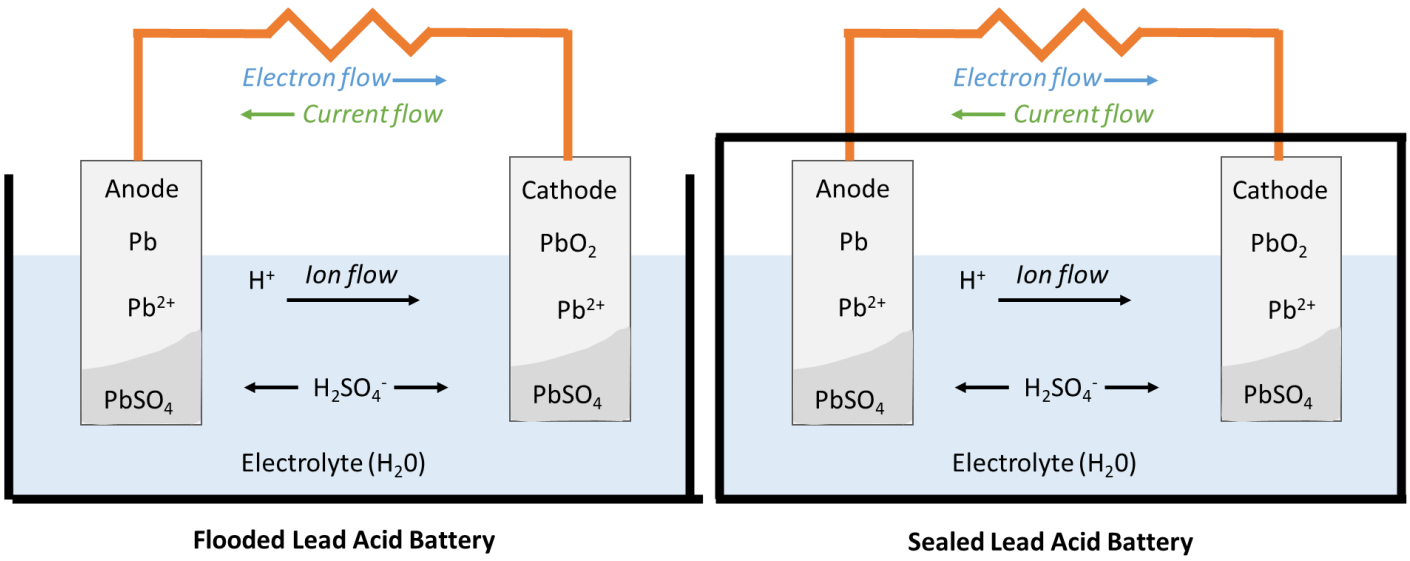

Figure 20. Schematic comparing a flooded (left) and sealed (right) lead-acid battery.

6.5.7 Absorbed Glass Mat

Absorbed glass mats, or AGMs, are a form of sealed LAB that use a porous boron silicate fiberglass mat between the electrodes to contain the electrolyte. The AGM acts like a sponge for the electrolyte and is resistant to physical damage like that caused by vibrations, shock, and even puncture. AGM batteries are more expensive, but are highly durable, have low rates of self-discharge, and have high, reliable performance. Higher-end combustion vehicles sometimes use AGMs instead of flooded LABs for these reasons.

6.5.8 Gel

Sealed lead-acid gel batteries are those in which the sulfuric acid electrolyte is not left as a liquid but is instead formed into a gel by mixing in silicon dioxide. The gel is applied at higher temperatures but then solidifies as it cools. These sealed LABs are only viable if they are used with a low C-rate, or charge/discharge current, because they cannot accommodate the rapid formation of gases without having a vent for them to escape.

6.6 Maintenance of Batteries

Heat is a form of energy, and when chemical reactions are exposed to heat or increased temperature, their chemical reactions speed up. The same is true for batteries. Maintaining a safe environment for a battery is critical to their proper operation. Batteries exposed to either extreme hot or cold temperatures will suffer from reduced performance, and in some cases safety issues. Colder temperatures slow the reaction and therefore lower the battery's capacity. Hotter temperatures, on the other hand, speed up the battery's reaction and increase the capacity—but too much heat can cause the reaction to speed up uncontrollably, leading to what is known as thermal runaway—an uncontrolled and dangerous reaction that will not only damage the battery but can lead to difficult-to-control fires.

Less dangerous but important to maintaining the full lifetime of batteries is managing self-discharge. Battery self-discharge occurs when batteries are not in use or connected to a circuit

while stored for extended periods of time. Due to inherent thermodynamic instabilities within the battery, self-discharge occurs when the battery initiates the discharge process on its own, leading to a loss in battery capacity. Different battery chemistries have different susceptibilities to self-discharge. Nickel-cadmium and nickel-metal-hydride batteries are the worst; they have a self-discharge rate of between 15 percent and 25 percent of the overall capacity per month of idle storage. While nickel-based batteries have the worst rates of self-discharge, the reaction is entirely reversible. LABs, on the other hand, produce lead sulfate while self-discharging, which can lead to permanent loss in performance if left unchecked for months at a time. Fortunately, this problem can be easily mitigated by simply making sure to occasionally fully recharge batteries that are in storage.

Other than ensuring proper safety and storage conditions, proper battery operation is the main maintenance procedure for battery systems. Manufacturer's estimate both the calendar life and the cycle life for the batteries they sell, depending on the conditions under which they are operated. When choosing a battery chemistry, it is important to read the manufacturer's suggested operating conditions to ensure the proper choice for your application, because some chemistries are better suited to different temperatures and operation modes. Calendar life refers to the aging of the battery components simply with the passage of time, both while in use and while stored. Cycle life, or the number of cycles that a battery can be expected to achieve before its capacity falls below usable levels, depends on how often a battery is used, and the combined charging and discharging process is known as a battery cycle. The C-rate, or the rate of charge/discharge, the temperature, and the depth of discharge all affect the cycle life of a battery, depending on its application. The comparison of these characteristics for a Lithium-ion and lead-acid battery are in Table 3.

Table 3. Lithium-ion vs. lead-acid comparison.

	Lithium-Ion	Lead-Acid
Depth of Discharge	~ 85%	~ 50%
Degradation	~ 2% self-discharge, increases with temperature	4–8% self-discharge, can damage battery if unchecked
Operating Temperature (Battery University, 2022)	Charging: 0 °C to 45 °C Discharging: −20 °C to 60 °C	-20 °C to 50 °C
Cost	~ 3× price of sealed lead-acid	
Cycle Life – Depends on Depth of Discharge	NMC: 300–1000 cycles LFP: 2000–3000 cycles	~ 400 cycles
Efficiency	> 93%	> 80%
Recycling	Contains no heavy metals	Lead recycling

Fortunately, there are many less-intensive applications—known as second life uses–for which those batteries can still be used. For example, the batteries used in electric vehicles and buses are considered no longer usable when their capacity has been reduced below 80 percent of the original specifications, but these batteries can be re-rated and used for large-scale energy storage installations, giving them a second life. Battery recycling and second life programs continue to grow, and it is important to consider the second life uses during initial purchase of battery systems as well as at the end of their cycle life.

6.7 Controls

Single batteries can be wired together to form larger battery packs that either have increased voltage or current depending on how the batteries are connected (Choi, et al., 2021). Individual battery modules can have a battery management system, or BMS, to ensure the battery functions properly. When many modules are connected to form a battery pack, the combined BMS forms a battery control unit (BCU) that handles the safety, monitoring, communication, and control of the system. The capabilities of BCUs differ between battery models and manufacturers, but the core protection and management systems are always present.

6.8 HVAC, Enclosures, and Structures

Large-scale ESS are made up of many battery packs combined for greater capacity to meet the demands of the grid or renewable generation asset they serve. Because these systems have many individual batteries, they require more complicated communications, controls, monitoring, and safety equipment. A typical configuration of an ESS is shown in Figure 21.

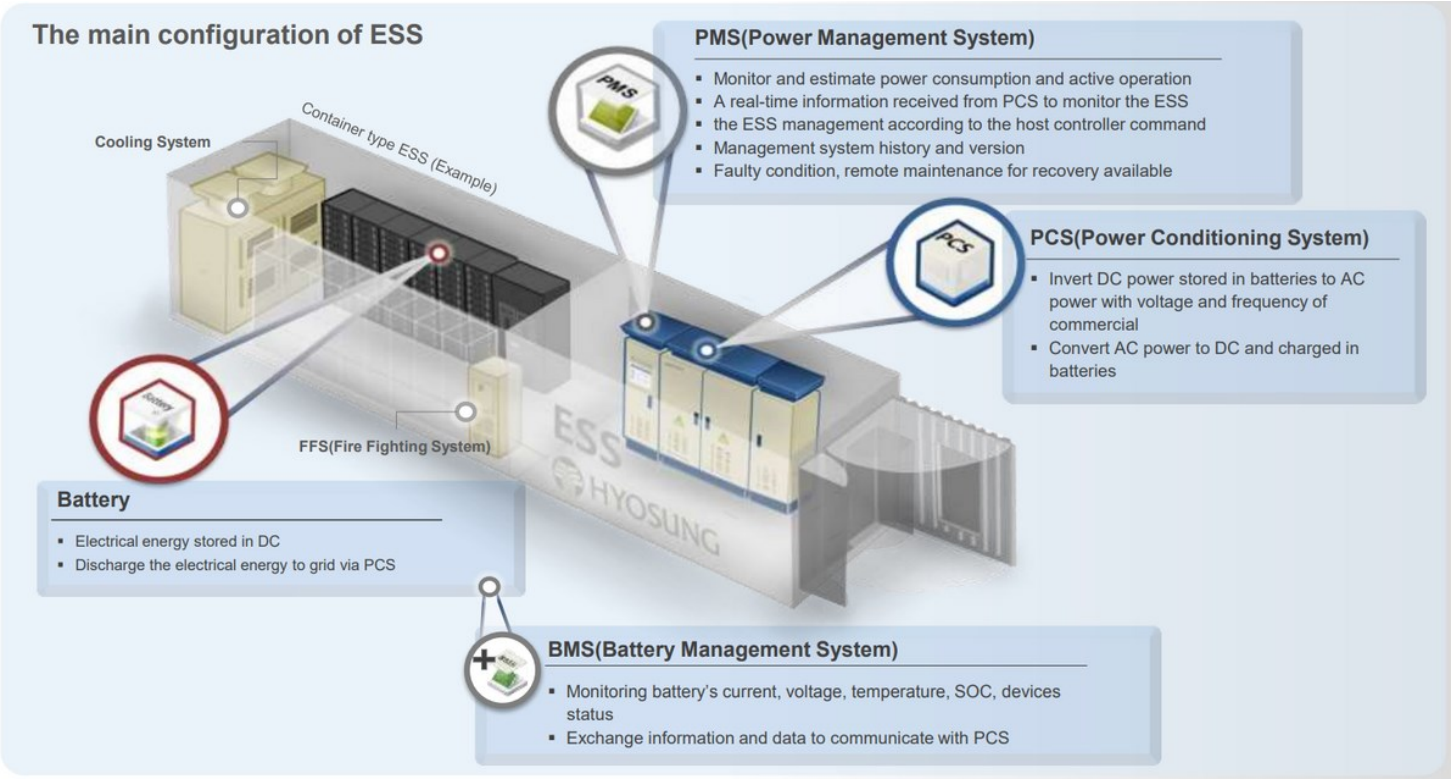

Figure 21. Energy storage system components and function (Image Credit: Hyosung Heavy Industries).

Each element in a large-scale ESS is subject to strict safety codes and standards. They include building fire and life safety systems codes as well as communication standards and installation, interconnection, and performance requirements. A current breakdown of code requirements is shown in Figure 22.

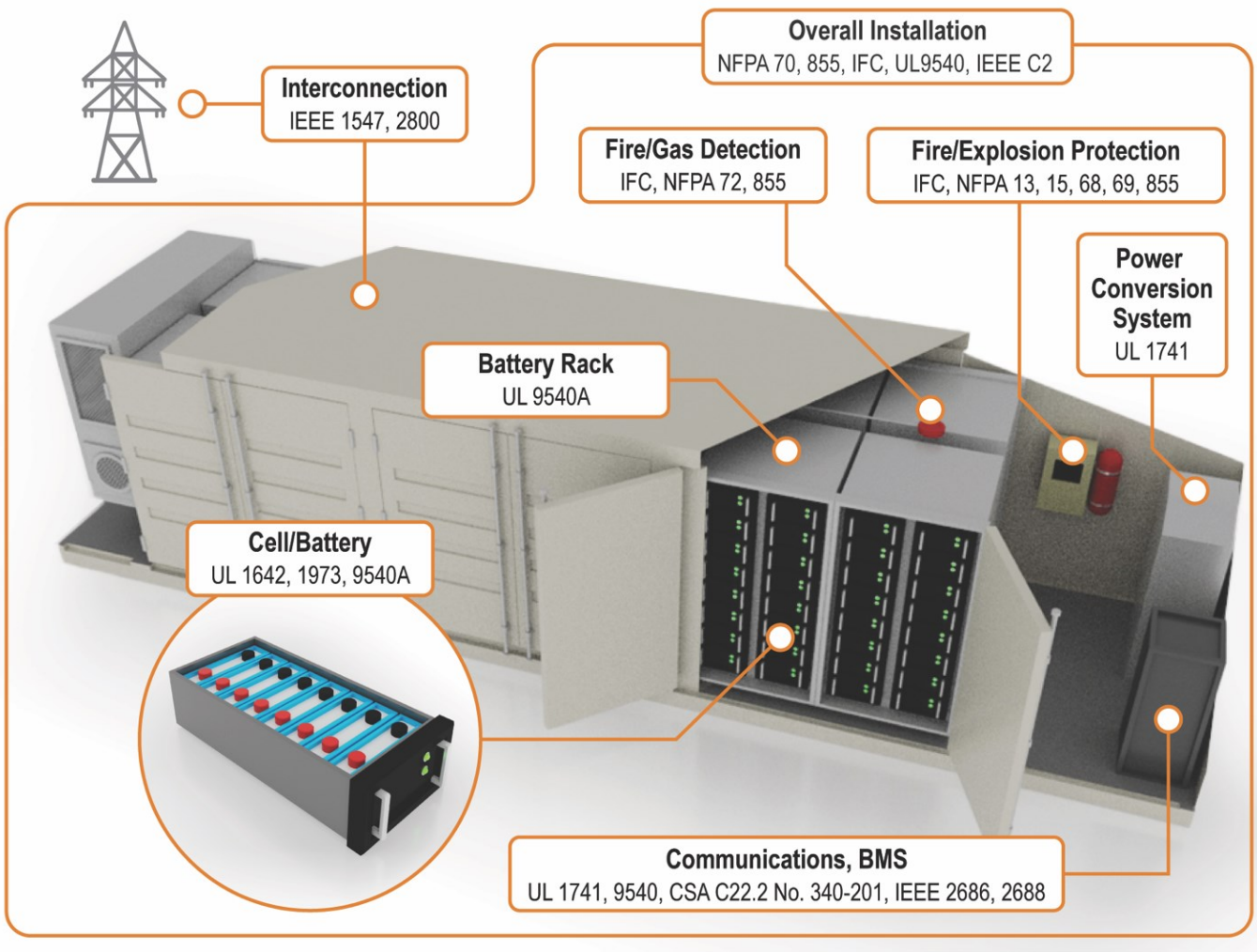

Figure 22. Energy storage system codes and standards (Image Credit: Matthew Paiss Battery Safety).

6.9 Assuring Safety and Managing Risks

Actions to be taken to address safety concerns and manage the risks associated with lithium-ion batteries and lead acid batteries are listed below.

6.9.1 Lithium-Ion Batteries

- Odor, heat, or bulging of the battery are signs of battery degradation. Promptly disconnect the battery, leave the area, and call safety personnel if any of these safety hazards are observed (UMassAmherst, 2020).
- Protect lithium-ion batteries from physical damage, overcharging, and excess heat because each of these conditions can lead to thermal runway—an uncontrollable buildup of pressure and heat that can cause fire and explosion. Excess heat, a hissing sound, or bulging batteries are warning signs of thermal runaway. If possible, disconnect the battery from its power source and extinguish battery fires with a class ABC or BC fire extinguisher. If it is not possible to take either of these actions, IMMEDIATELY evacuate the area, because these fires can spread very quickly.

- Do not charge or discharge batteries past the manufacturer's specified voltages.
- Disconnect batteries from the charger once fully charged.
- Do not store lithium-ion batteries at full charge, discharge the batteries to a 50 percent state of charge before storing them.
- To prevent damage caused by self-discharge, recharge stored batteries to a 50 percent state of charge at least every 6 months.

6.9.2 Lead-Acid Batteries

- Do not charge LABs in small, enclosed areas. If possible, charge batteries under a fume hood, but at minimum in a well-ventilated area. A recharging LAB in a poorly ventilated area poses a fire risk because of the presence of the highly flammable and odorless hydrogen gas that is vented while charging.
- Make sure to clean any residue from the vents of LABs to avoid pressure buildup.
- An unpleasant odor, similar to the smell of rotten eggs, is a sign that a LAB is producing poisonous gas. Leave the area immediately and call safety personnel.
- When using a flooded LAB, make sure the electrolyte levels are full after the battery has been charged and allowed to cool. The electrolyte can be replenished with distilled or deionized water, but ONLY after being disconnected from the power source and cooled to room temperature.
- When using a flooded LAB, protect it from physical damage, because the sulfuric acid electrolyte is highly corrosive and dangerous.
- Before storing LABs, bring them back to a full charge. To prevent damage from self-discharging, fully recharge stored batteries at least every 6 months when they are not in use.

7.0 How to Size a PV + BESS

Analysis of the electricity demand is required to size a PV and BESS, which must then be aligned with the available sizes from manufacturers.

7.1 Demand or Load Analysis

Demand or load analysis is the first step to sizing a PV + BESS. If the building is utility connected, monthly load data [Wh] is available from utility bills or can even be downloaded at the hourly or sub-hourly timescales directly from the utility's website. However, if that information is not easily accessed, it is possible to manually estimate the daily load using load tables. To determine how much PV or battery capacity is needed for a building, first inventory of all the electricity loads. This can be done manually, by first individually listing and summing the loads, the quantity, and power requirements (in watts). Then, multiply the power requirements by the average time in use to get the average daily load, in watt-hours, shown in Table 5. Once these data are collected, the system is then sized to either meet or substantially offset the building's electricity demand, depending on the project objectives. While capturing every electricity use can be a challenge, the more information in these tables, the more accurately the PV array can be sized.

Table 4. Example Load Table

Load Description	Number	×	Power Rating [Watts]	×	Usage: Hours/Day	×	Usage: Days/Week	$\times \frac{1}{7} =$	Average Daily Load [Wh]
Indoor Lights	10	×	15	×	5	×	7	$\times \frac{1}{7} =$	750
Electric Cooktop	1		1200		1		5		857
Laptop	2		60		8		5		686
							Total Avg Daily Load		2,293 Wh

The average daily load can be used to estimate the required size of a PV array. The array size will also depend on the available solar resource according to Figure 6 below, which varies based on the location it is installed. The less solar resource available, the larger the PV array must be to generate sufficient electricity. The panel's efficiency also factors into the array sizing, as the more efficient the panel, the greater the electricity output. An example calculation using the average daily load from Table 4 is shown in Table 5. Note that the PV array capacity is rather small in this example, that is because it was sized to only meet the load of a few lights, a cooktop, and two laptops. Peak Sun Hours per Day can be estimated using a Solar Irradiance Map like that in Figure 23, which provides Global Horizontal Irradiance values in kWh/m^2/Day.

Table 5. PV Sizing by Load

Average Daily Load [kWh]	÷	Peak Sun Hours/Day[1]	÷	1 – (Panel Efficiency) [Decimal]	=	PV Array Capacity [kW]
2.293	÷	5.75	÷	0.85	=	0.47

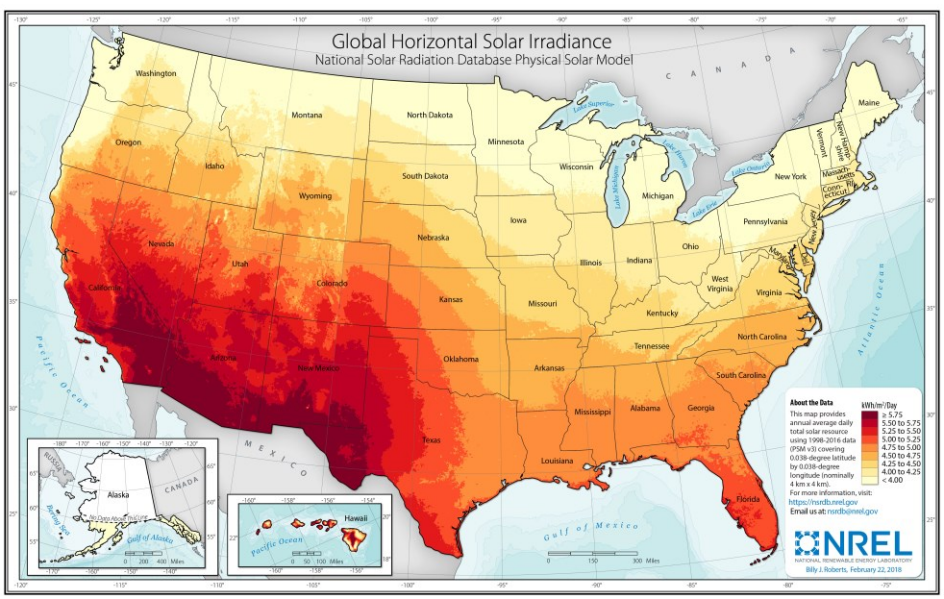

Figure 23. GHI (Global Horizontal Irradiance) NREL Map

7.1 Sizing by Available Area

After performing a demand analysis and PV + BESS sizing, one must confirm the PV system will fit within the available installation area. This area can be on a rooftop, on the ground next to a building or load, or even atop a covered parking structure. Importantly, this area must be either flat or the slope/roof pitch must be south, SW, or SE facing in the northern hemisphere to point toward the equator. In the southern hemisphere, solar panels are sited north-facing, also pointed toward the equator to maximize the solar irradiance. Once the available area is calculated, a rough estimate of the maximum PV capacity is found by multiplying that area, in square meters (m^2), by the efficiency of the PV modules selected and the average solar irradiance of the location, in watts per square meter (W/m^2). The product gives a rough estimate of the maximum array capacity, in watts. The actual maximum capacity will be reduced, because the rectangular panel shape does not fit into every angle and curve of the area, and space is needed between the panel rows and for wiring and access (this factor is usually estimated to be 44 percent of the area needed). This method can also be used in lieu of sizing based on load, simply to maximize the PV array to the available area. An example calculation is shown in **Error! Reference source not found.**. Note: if converting sqft to m^2, divide the area by 1 0.764.

Table 6. PV Sizing by Available Area

Available Area [m^2]	×	Module Efficiency [decimal]	×	STC[1] [kW/m^2]	×	Sizing Factor[2] [decimal]	=	Array Capacity [kW]
150	×	0.15	×	1	×	0.44	=	9.9

[1]STC, or the Standard Testing Conditions, require manufactures to test their panels' power output by illuminating them under a standard 1 kW/m^2 irradiance at 25°C and AM 1.5 (standard air mass).
[2]This Sizing Factor is used to account for row-to-row spacing between panels, maintenance paths, panel framing, and fire code regulations

7.2 Battery and Component Sizing

The batteries are sized based on the daily load, the efficiency of the inverter, and the DC system voltage. The number of batteries needed is scaled based on the voltage of the batteries chosen and the desired duration of use or outage requirements, known as days/hours of autonomy. This outage duration is a design decision chosen based on location, grid stability, and outage history (both frequency and duration). This is the outage time during which the batteries would be responsible for supplying all the electricity demand. This can also be scaled based on whether demand is reduced during an outage, such as with a critical loads panel that automatically switches off unnecessary electric devices to reduce electricity usage and extend the time during which the batteries can be used to ride through an outage. The size of the battery required to sustain a load though an outage scenario is found by multiplying the daily average load by the outage length (or days of autonomy), and then dividing by the allowed depth of discharge of the battery. Recall that the depth of discharge (DoD) is one minus the state of charge (SoC), and that the allowable DoD will be listed on the manufacturer's spec sheet. Table 7 provides an example calculation.

Table 7. Battery Sizing

Average Daily Load [kWh]	×	Outage Length [Days]	÷	Depth of Discharge	=	Battery Capacity [kWh]
2.293	×	3	÷	0.7	=	9.8

The above calculation sizes the battery capacity based only on the average load, outage length, and battery specifications. In order to size a battery that also participates in market or ancillary services or is utilized for demand response to reduce utility bills as well as outage resiliency, more complicated calculations are required that are typically performed using sizing software.

Inverters are rated by maximum DC amps (continuous) and surge watts. The maximum DC amps are calculated by dividing the DC system voltage of the PV array by the total connected AC power, in watts. The estimated surge watts are typically three times the peak. The charge controller is rated by array and load amps, sized based on the characteristics and number of modules, the total DC connected watts, and the DC system voltage.

7.3 PV, Storage, and Inverter Technologies

Different technologies are used to make solar cells that convert light from the sun into electricity. Silicon cells are the most common and can be monocrystalline, where the cell is made from a single crystal of silicon, or polycrystalline, where many silicone crystals are merged. Monocrystalline cells are usually more efficient because they have a higher purity than polycrystalline cells. Thin-film cells are made with extremely thin layers of semiconductor material, such as copper indium gallium diselenide or cadmium telluride (Solar Energy Technologies Office, n.d.). Thin-film cells are more flexible and are often used for portable applications, although their efficiency is generally lower than that of silicon cells. Another solar cell technology is the multijunction cell, typically made of gallium arsenide and other materials. Multijunction cells are more efficient than silicon cells, but more expensive, and usually used in space applications.

Solar efficiency represents the amount of incoming energy from the sun to the panel that can be converted into electricity as an output. The efficiency of a solar panel is calculated based on many factors, including material used to build the cells, temperature, shade, module wiring to transfer the generated electricity, and the module position. The most effective PV modules today for residential, commercial, industrial, and utility applications can achieve efficiency over 20 percent. Solar panels are tested at a standard ambient temperature of 25°C (77°F), according to the standard test conditions.

The PV temperature coefficient tells us how much of the power generated is lost as the solar panel's temperature rises above 25°C (77°F). The temperature coefficient of a solar cell usually stays between -0.2 and -0.5 percent, with higher-quality panels having higher temperature tolerance (i.e., temperature coefficients closer to zero). A temperature coefficient of -0.4 percent, for instance, means that for every 1°C of increase above 25°C, the module efficiency will drop by a rate of 0.4 percent.

Aspects such as product warranty, efficiency, and temperature coefficient also need to be taken into consideration when selecting PV systems, in addition to the price and manufacturer brand. The best option will depend on the specifics of the location where the system will be installed

and the customer's preferences. However, the system cost, longevity, local availability, and higher efficiency are typically the leading factors when designing a solar system.

7.3.1 Lithium-Ion Battery Technologies

Lithium-ion batteries have many applications, such as in electrical vehicles, portable electronics and appliances, and BESS for the electric power grid, referred to as front of the meter, and for customer-sided applications, referred to as behind the meter, such as microgrids and residential, commercial, and industrial buildings. The scale and size of the BESS will vary depending on the application. Lithium-ion BESS have a land footprint estimated around 5–7.5 m^2/MWh (54–80 ft^2/MWh) for power systems applications (Mongrid, 2020).

Due to the current international market conditions, such as supply chain issues and the geopolitical situation in Europe, BESS have seen an increase in demand, many times unable to be matched by the suppliers. Restrictions on system size were reported with Tesla and Samsung. LG had a recall issue on models prior to 2019 and is currently having problems with an inventory shortage. Due to these extraordinary conditions in 2022, clients should plan ahead and be prepared for some delivery delays.

A battery has a power capacity and an energy capacity rating. Usually, battery ratings are given in energy capacity (kWh), or in power and energy capacity (kW/kWh). The first relates to the amount of power that can be charged or discharged; the latter relates to how much energy can be stored.

7.3.2 Inverter Technologies

The energy output from PV panels and batteries is in DC, but most of the residential, commercial, and industrial loads are powered in AC. The difference between AC and DC is how the electricity flows through the wires. While DC is how the electricity flows when it comes out of the PV panels and batteries, AC electricity is safer and more powerful for traveling long distances.

To convert from DC to AC, we need electronic devices called inverters. DC current travels in one direction, but AC current switches back and forth and in different patterns called frequencies. These patterns are described using mathematical graphs, the best graph being the sine wave. Depending on the quality of the inverter, it can output the electricity in pure sine waveform, like what is made available by the local utility; a modified sine wave, which is similar to a modified squared waveform; and a square wave. These other math graphs have a lower quality and can potentially hurt other devices drawing the electricity.

Additionally, depending on the system and load requirements, inverters can convert from DC to single-phase or three-phase AC. Residential houses typically use single-phase AC power, whereas commercial and industrial facilities use three-phase AC power because it can handle higher electrical loads.

8.0 Microgrids Overview

A microgrid’s defining characteristic is its ability to control load and supply almost independently from the rest of the surrounding electric grid. Each U.S. state might have different definitions for a microgrid. However, it is widely accepted that microgrids are local, independent, and

intelligent systems that can maintain power during grid outages by disconnecting from the grid. Microgrids can operate both connected or disconnected from the grid. In grid-connected mode, the microgrid operates in sync with the traditional electric grid. A microgrid controller is responsible for detecting technical conditions, such as a power outage, when the system should disconnect from the grid, depicted in Figure 24. Once the microgrid disconnects from the grid, it can still supply all or part of the power required by its loads. Generally, a microgrid is designed to supply the critical loads for a certain period when operating in islanded mode.

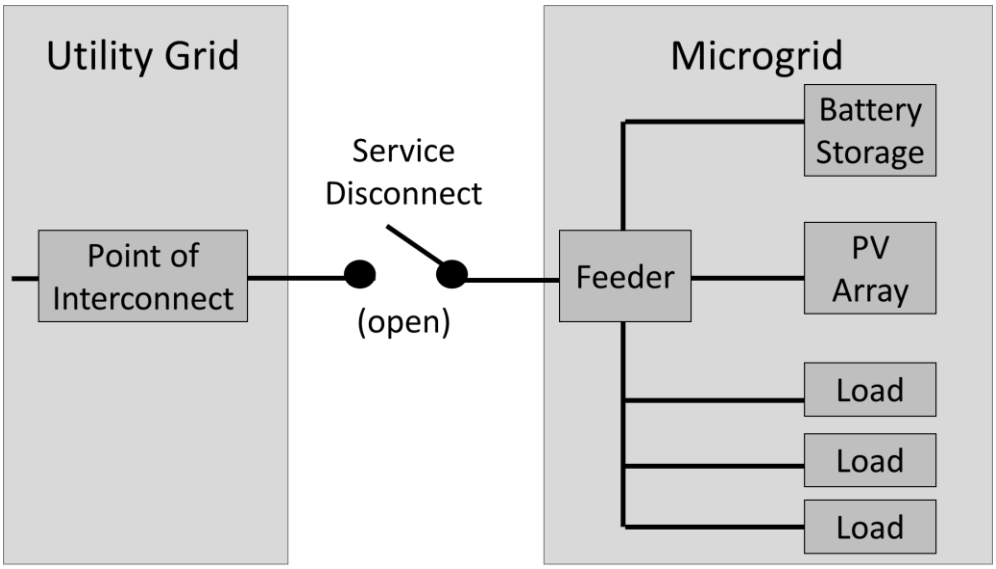

Figure 24 Islanded Microgrid

Microgrids can be owned by communities linked by physical location (Warneryd, et al., 2020). Communities can become more energy independent by using community microgrids. Additionally, implementing renewable energy resources and more resilient infrastructures in the microgrid can reduce greenhouse gas emissions and help communities adapt to climate change.

Microgrids also improve community reliability and resilience by providing energy independence from the main power grid. Reliability is a system's ability to continuously provide power and keep loads satisfied. Resilience is a system's ability to withstand and continue its operation during and after a disruption. Among these benefits, several other improvements that could be provided by microgrids include energy independence, power quality, and energy efficiency. Microgrids can enable facilities to be powered by local generation and energy storage systems (ESS) and to sell excess power to the local utility. For direct current (DC) microgrids, the application of ESS along with different control strategies are used to reduce harmonics and improve the power quality in microgrids, among other benefits.

8.1 Key Drivers

There are three key motivations for a microgrid project: economic benefits, energy security improvement, and reduced greenhouse gas emissions (Hirsch, et al., 2018).

A microgrid that could provide power during peak demand hours, for example, can not only decrease energy bills by reducing demand charges but also help the local utility by deferring investments in distribution and transmission lines. Microgrids can also reduce losses in the transmission and distribution of electricity by generating and consuming it locally, thereby improving the efficiency of the system[1]. Another economic advantage of microgrids is the delivery of ancillary services. These are services that help the grid operator maintain a reliable power system. Examples of such functions are voltage control, frequency control (by adjusting unmatched supply and demand), congestion relief, and black start regulation (which helps with the restoration of the main power grid in case of a power outage).

Microgrids can improve resilience in response to extreme weather events such as tornadoes, hurricanes, and winter storms that can disrupt the service from the main power grid. In such cases, when the grid goes down, the microgrid can operate independently and provide energy for critical local facilities. Microgrids also improve resilience relative to cyber and physical attacks on the power system. The decentralized architecture of a microgrid, which is based on DERs instead of centralized generation plans, makes it less susceptible to attacks on key components of the system.

The reduction of greenhouse gas emissions is often achieved by using renewable energy resources such as wind, solar photovoltaics (PV), hydropower, and biofuels. These are sources of energy that have a significantly lower impact on the environment compared to fossil fuel resources. However, due to the intermittency of some clean resources such as wind and solar, these types of generation are usually coupled with ESS, which can mitigate voltage and frequency deviation and store energy generated in excess to be used at times when there is demand but no generation resources are available.

8.2 Microgrid Variations

Many microgrids are off-grid systems that do not depend upon electricity provided through the main power grid. They may be located in remote areas or areas that cannot support transmission lines (e.g., a place surrounded by difficult terrain) (Salam, et al., 2008). They are typically smaller than centralized grids and use local power generation to fulfill energy demands. A system of this nature is decentralized and is beneficial because it has fewer distance-related transmission losses but provides electricity in the same way as a traditional grid connection. Almost 26 million households are served through off-grid renewable energy systems.

Pico-grids and nano-grids are smaller than microgrid systems and tend to be used for community and commercial users rather than for industry. Pico-grids, nano-grids, and microgrids usually power households, buildings, and neighborhoods, respectively. Microgrid systems also have controllers and three-phase distributions as opposed to the single-phase distributions use in pico- and nano-grids (Hooshyar & Iravani, 2017). Though there are different classification systems, the International Renewable Energy Agency (IRENA) states that pico-grids carry energy management for all household devices that are connected as pico-loads to the network; nano-grids control nano-generation, nano-loads, and pico-grids (managing loads while simultaneously maximizing DER integration); and microgrids control nano-grids and

[1] https://www.energy.gov/oe/activities/technology-development/grid-modernization-and-smart-grid/role-microgrids-helping

microgeneration—they can be directly connected to the power network, a connection point, or another microgrid (Bower & Key, 2021).

9.0 Designing a Microgrid

Designing a microgrid involves careful consideration of its key components, financial factors such as operations and maintenance costs, applicable codes and standards, associated safety concerns, emissions, and available computer-aided design tools.

9.1 Key Components

A microgrid is composed of DERs, loads, controls, and an electric infrastructure that includes distribution lines, sensors, and protection equipment. Figure 25 shows the typical components in a microgrid.

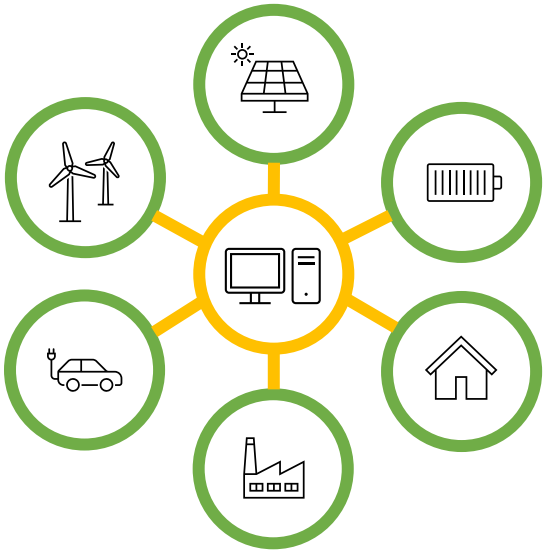

Figure 25. Typical components in a microgrid.

Typically, the DERs are diesel and/or natural gas generators, solar PV, wind turbines, fuel cells, and battery energy storage systems (BESS). Lithium-ion (Li-ion) BESS have seen a steady decrease in price for the past few years, mainly due to their application in the electrification of transportation.

The components and electrical requirements of the microgrid are laid out in a single-line diagram, also known as a one-line diagram. This is a block diagram representation of the electric power system, depicting the power flow between components in the system. Elements can include circuit breakers, transformers, capacitors, busbars, and conductors; an example microgrid one-line diagram is shown in Figure 26. Reading a one-line diagram can be difficult without a legend, though symbols are usually standard for the industry, are often labeled, and are searchable on the internet. The diagram typically reads top-to-bottom, starting with the utility incoming power and a disconnecting device such as a switch. One-line diagrams can be generated many ways but are usually a product of a power system analysis tool or an engineering firm.

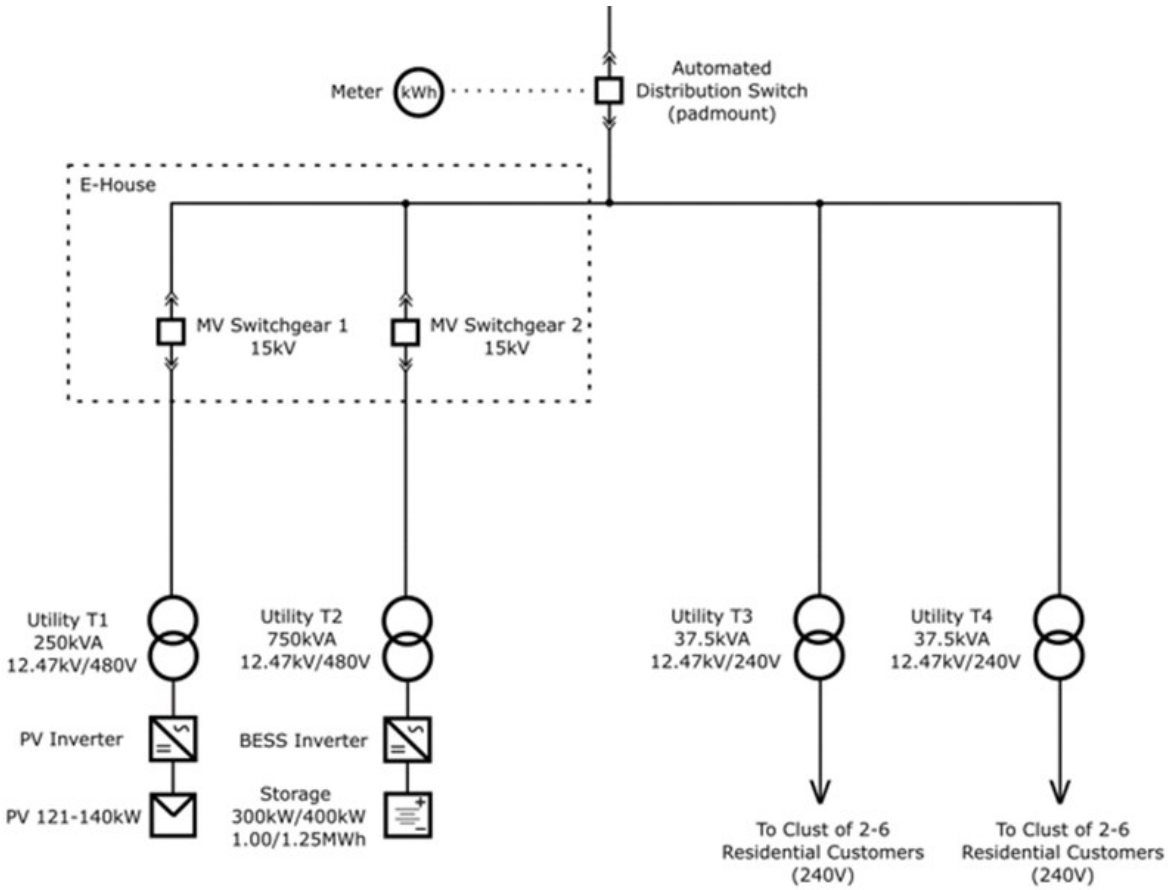

Figure 26 Example Microgrid One-Line Diagram

To match the local demand, a microgrid control system is needed to dispatch the DERs accordingly. Alternatively, if there is not enough generation to meet demand, the controller can also shed nonpriority loads to balance supply and demand. The microgrid controller acts as the brain of the system to guarantee its safe and effective operation. Advanced controllers make use of artificial intelligence to forecast demand and weather patterns to optimize the controls on energy management.

To monitor and act in a microgrid system, sensors and protection equipment that can communicate with the controller are required. Often, a Supervisory Control and Data Acquisition (SCADA) system is used to control, collect, and store data. SCADA systems interact directly with sensors and electrical equipment and record microgrid events in log files. The SCADA system allows real-time data monitoring to maintain efficient and safe microgrid operation. SCADA systems are used not only for microgrid systems, but also in many industrial sectors such as oil and gas, food, water, transportation, and others. Modern SCADA systems use Structured Query Language (SQL) databases, thereby improving security and reliability and allowing real-time data monitoring from anywhere in the world, as long as the user has internet connectivity[1].

[1] https://inductiveautomation.com/resources/article/what-is-scada

Additional devices and electrical equipment may be needed as part of the electrical infrastructure required by a microgrid. The infrastructure depends on the specifics of each microgrid project, but typically includes the following:

- distribution cables to distribute the power from generation to the loads
- transformers to step up or step down the voltage at different parts of the electrical system
- switches to isolate the generation and the loads depending on the controller's decisions
- power converters to convert from AC to DC (appliances power converters) or vice-versa (solar inverters)
- protection relays to sense disturbances on the main power grid and signal the need for island operation or reconnection to the controller

9.2 Financial Perspective

Because microgrids allow for less distance between generation and load, there are fewer energy losses, which can help reduce transmission and distribution payments for customers. Also, with the addition of local renewable DERs, generation could be less expensive overall because these sources can generate power during high market price hours and when there is congestion in the main grid. Grid-connected microgrids can sell any excess power back to the main grid and be paid or credited. Its local power generation can reduce energy costs and provide a better economic dispatch of energy resources (Kurnik & Voss, 2020). Something to be aware of is "standby charges," which are fees charged by some utilities to have the infrastructure ready to serve the facilities supported by a microgrid in case the microgrid's local generation fails or is insufficient to meet demand.

The Public Utility Commission regulates the rates and services of utilities that have the electric infrastructure for public service, and the Federal Energy Regulatory Commission regulates the transmission and sale of electricity and natural gas in interstate commerce. Microgrids have significant upfront costs, so it is important to review funding mechanisms in advance. Interconnection costs may be determined based on any distribution or transmission system infrastructure upgrades that need to be made so that energy can be delivered to and from the microgrid. Moreover, it may be useful to note that microgrid owners/operators may prioritize less energy and lower capital costs throughout the grid's lifetime, while the utilities and customers may be more concerned about reliability and stability (Azimian, et al., 2020).

Power outages can generate monetary losses due to their impact on equipment, personal belonging replacement, and productivity costs. A microgrid and its energy assets can help decrease the operations and maintenance (O&M) costs of the main power grid, avoid needing to replace aging equipment, and increase energy savings. Generating energy with on-site assets can also be cheaper than buying energy from a local utility in some states—DERs and energy storage can work to manage peak loads to reduce utility costs overall. Some microgrid technologies may also qualify for financial incentives in accordance with state and local policies. Several types of utility contracts, facilities agreements, and traditional appropriations are all procurement options for microgrid implementation (Bellido & et al, 2018).

9.3 O&M Costs

After installing a microgrid, there are some costs associated with its operation and maintenance (O&M) so that the project is reliable, efficient, and able to meet the customer's long-term needs.

Site personnel should be trained in the O&M of the microgrid, and the microgrid operator should have a background in utility electrical distribution engineering, if possible. This way, the operator can navigate software tools and supervisory systems and interact with experts if technical assistance is necessary.

With the increasing implementation of microgrids, O&M are becoming a sustainable source of revenue for vendors and integrators, which is often a good alternative for communities in which a microgrid implemented by the local workforce is not available. According to a survey by Navigant Research, North America—which leads the world in microgrid installations—the company has an estimated annual revenue of $412 million in fixed O&M, which is expected to grow to $1.6 billion by 2026[1].

Generally, the maintenance of electrical power systems is either preventive or corrective. Preventive maintenance is performed before the failure of a component to avoid significant costs, compared to corrective maintenance which occurs after a failure (Haney & Burstein, 2013). Preventative maintenance is focused on minimizing costs and maximizing reliability. Smart maintenance, for instance, is a new concept that uses smart devices and big data analysis to recommend optimal preventive maintenance tasks (Alvarez-Alvarado & Jayaweera, 2020). Even with preventative maintenance, occasionally a component will fail and corrective maintenance must be performed with the intent of restoring the system. If this type of maintenance requires replacement parts that are not warehoused locally, operation restoration can be delayed while waiting for parts. Avoiding such disruptions is why preventive maintenance is so important.

Maintenance costs can range from simple component replacement to complex engineering services. Typically, the O&M costs for a microgrid project include the following:

- Remote monitoring: Supervisory systems are often implemented so the operator can monitor the microgrid's function. There are costs associated with the proprietary supervisory systems, training, and maintenance of sensor equipment used for data collection.
- DER maintenance: Generators, PV inverters, PV panels, BESS, wind turbines, and other generation assets have a finite lifetime and require preventive and corrective maintenance.
- For PV systems, routine preventive maintenance is recommended at least once a year. Technical personnel should conduct a physical inspection at the site to check for vegetation growth and shading, water pooling around the array or racking, defects on PV modules, appropriate safety signs, ground erosion, the status of electrical components, insulation of the cables, corrosion, system grounding, and animal infestation (Fu, et al., 2020).
- For BESS, information about charging and discharging rates, battery temperature, and state of charge can be used for determining maintenance routines and new control methods on the microgrid operation to decrease degradation and maximize the lifespan of these components.
- Electrical and communications infrastructure maintenance. Fiber-optic cables are generally used between the control workstation(s) and protective equipment.
- Diagnosis and troubleshooting: Service providers often need to be contracted for diagnosis and troubleshooting if the local workforce is not able to solve a technical problem. Developers should plan for such events when planning a microgrid project.

[1] https://infocastinc.com/market-insights/power/global-revenue-microgrids/

- Training: Microgrid operators should receive on-site training on microgrid operation and controls. More than one person should be trained in case one cannot reach the facility during emergency situations. Table 8 lists desired training topics for microgrid operators.

Table 8. Training requirements and desires.

Must-Have	Nice to Have
System configuration	Reliability
Storage and solar generation	Electric vehicles charging
Wind generation and control	Power quality/harmonics
Diesel/natural gas generators	Cybersecurity
Combined heat and power	Demand control strategies
Transformers and cable basics	Frequency restoration
Black start and load restoration	Electricity market
Islanded and interconnected operation	Microgrid central controller
Inverter control strategies	Major vendors
Microgrid stability and protection	Optimization

9.4 Applicable Codes and Standards

The Institute of Electrical and Electronics Engineers (IEEE) has developed standards applicable to microgrids, including conformance test procedures for equipment and specification of microgrid controllers. IEEE 1547 deals with the interconnection and interoperability of DERs with electric power systems, and the IEEE 2030 series includes recommended practices and requirements for devices and systems (Bower & Key, 2021). The International Electrotechnical Commission (IEC) 62898 provides guidelines for microgrid project planning and operations, along with technical requirements for protection and control. The IEEE P2030.8 deals with testing procedures for microgrid controllers.

Additionally, the National Electrical Code (NEC) has numerous articles about energy systems and power production sources (i.e., Article 712: DC Microgrids, Article 750: Energy Management Systems, Article 710: Stand-Alone Systems, etc.). The National Fire Protection Association (NFPA) updates the NEC to ensure safety for these technologies (Odrowski, et al., 2022).

A variety of standards related to communication and cybersecurity are also applicable, such as the IEC 61850, which deals with the automation of transmission, distribution, and substations; IEC 60870-6, related to the exchange of data among utilities; and IEC 62056-5-3, which deals with the exchange of data for advanced metering infrastructure.

9.5 Hazards, Mitigation, and Safety

Microgrids must be able to transition to islanded mode during utility grid power outages with little disruption to the loads within their boundaries. This is especially vital during physical and natural hazards that may cause these disturbances.

Safety issues can occur because of a lack of backup systems, spare parts, and inaccessible equipment. Mitigation strategies for microgrid vulnerabilities include system hardening (e.g., designing circuits to avoid single points of failure, diversifying energy sources, securing equipment, etc.) and operational work (resilience plans, emergency procedures, on-site resources, monitoring performance of assets, etc.) (Hooshyar & Iravani, 2017).

Other issues can make protecting microgrids more difficult. The large difference in fault current levels between grid-connected and island modes of microgrids, the reliance of some microgrids on voltage source converters (which exhibit unconventional fault behavior), and other microgrid-unique failures can all pose risks (Kempener, 2022).

Therefore, microgrid protection schemes are necessary. They are based on different elements, such as directional overcurrent and resistance-inductance algorithms, and can help assure that loads, lines, and distributed generation (DG) within the microgrid are protected (Salam, et al., 2008). Furthermore, microgrid stability is essential for smooth resynchronization (reconnection of the islanded microgrid to the utility grid, ensuring that microgrid and utility grid voltage and frequency are synchronized) without experiencing potential damage caused by current surges (Sakshi, 2020).

9.6 Emissions

Energy generation across the world accounts for approximately 40 percent of total greenhouse gas emissions (Azimian, et al., 2020). With the growing implementation of renewable energy resources, such as solar PV panels, wind turbines, and hydropower, microgrids can help reduce greenhouse gas emissions by using these renewable energy assets. BESS manage the cycling between the oversupply of renewable energy when the sources are abundant and the storage when the sources are unavailable, also with zero emissions. A microgrid can also use on-site energy that would be lost in transmission lines, thereby helping save energy as well[1].

If a fuel-based generator is used as an energy resource, it will produce emissions when running. When looking at the total environmental impacts of microgrids, it is also important to include embedded emissions—associated with making, installing, maintaining, and decommissioning microgrids[2].

10.0 Examples of Microgrid Projects

Many microgrid projects have been implemented throughout the United States. In Borrego Springs, California, a microgrid system set up by San Diego Gas & Electric (SDG&E) helps provide energy and improve resilience for about 2,500 residential and 300 commercial/industrial customers. It consists of 26 MW of solar PV and 3 MW of customer-owned rooftop solar PV, three community energy storage batteries, two 1.8 MW DG resources, and SDG&E's 69 kV to 12 kV air-insulated substation. Local power generation, energy storage, and automated switching would help enable the microgrid to function independently during natural hazards and other emergencies (Hilal, et al., 2019).

---

[1] https://www.c2es.org/content/microgrids/#:~:text=Microgrids%20can%20help%20deploy%20more,grid%20resilience%20to%20extreme%20weather

[2] https://energy.mit.edu/news/the-microgrid

In Colorado, the Fort Collins Zero Energy District (FortZED) project consists of a microgrid with mixed DERs designed to reduce peak loads, increase renewable energy penetration, and build reliability and efficiency for its several customers: the City of Fort Collins, New Belgium Brewery, Larimer County facilities, Colorado State University facilities, and InteGrid laboratory. The assets for this project include 345 kW of solar PV, a 5 KW fuel cell, 700 kW of CHP (combined heat and power), and 60 kW generated by microturbines. Additionally, the various facilities have diesel backup generators totaling 2,720 kW in capacity—the peak load is about 45.6 MW across 7,257 customers[1]. Other technologies used include plug-in hybrid electric vehicles, thermal storage, and load shedding.

On Kodiak Island, in Alaska, with a population of ~15,000, the Kodiak Electric Association established an islanded microgrid with renewable sources. The system went online in 2012 with a decentralized microgrid control system. As of 2020, 99.7 percent of the island is electrically powered by wind and hydropower, generating 28 MW of capacity[2]. The microgrid's assets include wind turbines with 9 MW capacity, two 1.5 MW BESS, a 30 MW hydroelectric plant, and two 1 MW flywheel systems[3].

The U.S. Department of Defense installed a microgrid in Fort Sill, Oklahoma, for continued operation through power outages due to natural hazards, equipment failure, and even deliberate power grid attacks. It is a full-scale microgrid that can transition smoothly between grid-connected and island modes. The system has two 240 kW natural gas generators, 20 kW of solar PV, a 2.5 kW wind turbine, and a 400 kW Li-ion BESS as assets. The microgrid is unique, given that it has dynamic loads and a commercial isochronous generator control system[4]. The design aims to improve the security and reliability of energy, while reducing fuel costs and increasing renewable energy usage.

As reduced utility costs and emissions become more desirable, many companies and institutions are in the process of planning and constructing microgrids. Gallaudet University in Washington, DC, in partnership with Scale Microgrids Solutions and Urban Ingenuity, is working on building a clean energy microgrid to be online in the fall of 2023. It will be able to operate in island mode or with the DC power grid, and nearby households or small businesses can buy solar energy generated at the university. The microgrid plan incorporates 2.5 MW of solar PV (panels on rooftops and garages across campus), a 1.2 MW Li-ion BESS, a 4.5 MW CCHP (combined cooling, heating and power) system, and advanced microgrid controls to ensure seamless collaboration of all assets[5].

10.1 Electrical House

The concept of an electrical house, also known as an e-house, is very common in Europe, is made of precast concrete, and is distinct due to its modularity. The electrical infrastructure usually consists of a medium-voltage electrical substation. Medium- and low-voltage cables connect electric equipment stored inside the e-house, such as transformers, switchgear cabinets, and electrical panels. If the switchgear and breakers are motorized, control and communication units can be installed. The latter can be connected to electrical equipment through fiber-optics distribution to enable interconnected/islanded operation of the microgrid.

[1] https://microgrid-symposiums.org/microgrid-examples-and-demonstrations/fort-collins-microgrid/
[2] https://www.hitachienergy.com/case-studies/kodiak-island
[3] https://clean-coalition.org/community-microgrids/microgrids-across-the-united-states/
[4] https://www.eaton.com/us/en-us/markets/infographics-listicles/design-of-the-fort-sill-microgrid.html
[5] https://gallaudet.edu/gallaudet-university-campus-to-be-powered-by-clean-energy-microgrid/

The lifetime of an e-house is estimated to be around 50 to 60 years; it helps protect electrical equipment from harsh weather conditions and defers their replacements. Comparatively, a metal-clad switchgear typically has a lifespan of 20 to 30 years. Figure 27 shows examples of E-houses.

Figure 27. Examples of e-houses (pictures are courtesy of Romeo Colombara, Electric Engineer).

10.2 Challenges

In terms of technical challenges, the generated active and reactive power and the power consumed by the loads, including energy losses in the transmission lines, must be balanced. When demand and production are not equal, an unbalanced condition occurs. Thus, voltage and frequency control systems are important to have for microgrids so that voltage and frequency can be monitored and adjusted as needed for active and reactive power. When operating more than one DG, a droop-based controller can be used to regulate voltage. Droop controls can accommodate changes in frequency and distribute proportional loads to the different generators without communication between them.

External factors can pose challenges for microgrids as well. While some states have policies to incentivize their development, others have regulations that hinder microgrid activities (Oueid, 2019). As of 2022, the only states that have legislative policies facilitating the development of microgrids are California, Connecticut, Maine, Massachusetts, Hawaii, and Puerto Rico (Shea, 2022). In addition, in more than 15 states, despite the lack of state legislation, there are regulations coming from other agencies—the utility regulatory commission and energy offices, for example—to bolster microgrid implementation. However, legislation is absent in the majority of the states, which imposes challenges with regard to its wide deployment and interconnection with local utilities.

Another challenge is the financial aspects of a microgrid. The high upfront cost may create financial obstacles. In addition, some laws may impose restrictions or create costs that were not

expected when a microgrid project was first being planned (Bellido & et al, 2018). Financial support and regulatory support might help alleviate these problems in the long term.

10.3 Microgrid Controllers

The microgrid controller is the enabling technology that manages the balance between generation and storage for loads within the microgrid's defined boundary. The controller manages the interconnection of the microgrid with the power grid and is capable of disconnecting from the grid in the case of an outage event, pre-planned utility safety power shut-off, or maintenance via a setting called islanded mode. This is possible because the controller is integrated with sensors that monitor grid variables that enable it to operate autonomously. This brings resilience to the facilities/load served by the microgrid, which is often the main objective of such systems. Advanced controllers are even able to provide power exchange with the grid, respond to disturbance events, and supply ancillary services.

The DOE has been supporting efforts to advance the functionalities of microgrid controllers. In 2014, DOE outlined 10 functions required of microgrid controllers:

- **Frequency Control:** The controller acts as the brain of the system to match generation and the loads within the microgrid within milliseconds to stabilize the frequency to the grid standard setpoint (i.e., 60 Hz in the United States; 50 Hz in Europe).
- **Voltage Control:** As the brain of the system, the controller also regulates the voltage at the point of interconnection with the utility, within milliseconds to an acceptable range.
- **Intentional Islanding:** The microgrid intentionally disconnects from the main grid in a pre-planned way (i.e., after a planned shut-off of the main grid for maintenance purposes).
- **Unintentional Islanding:** The microgrid disconnects itself from the main grid due to any anomaly detected, such as an outage event when the main grid goes down.
- **Resynchronization and Reconnection:** When the microgrid is operating in islanded mode (intentionally or unintentionally) and needs to reconnect to the main grid, it first must resynchronize with the main grid's voltage, amplitude, phase, and frequency before transitioning to interconnected mode.
- **Energy Management:** The energy management system interacts with the energy market and the utility to coordinate the microgrid's load and generation among the available assets for optimal operation.
- **Protection:** The controller can interact with protection devices and send signals for specific operations such as overcurrent and voltage protection.
- **Black Start:** The microgrid is able to restore itself after a complete shutdown without using an external source of electricity.
- **Ancillary Services:** The microgrid is able to provide ancillary services when in an interconnected mode. Ancillary services are a series of services that are required for reliable and secure operation of the electric grid, such as frequency and voltage regulation, black start, etc.
- **Microgrid User Interface and Data Management:** Users are able to monitor and interact in real time with the microgrid and also store operation data. (Parhizi, et al., 2015)

11.0 Glossary

Alternating Current (AC): electricity that periodically reverses direction as it flows through a conductor

Amplitude: the maximum distance or height of a wavelength, measured in meters, or m

Ancillary Services: services necessary to support the transmission of electricity from generation to loads to maintain the reliable operation of the transmission system; includes spinning and non-spinning reserve and frequency response and regulation (U.S. Department of Energy, 2015).

Atom: the fundamental unit of an element, comprised of a nucleus and electrons

Automated Distribution Switch: an electrical device that automatically switches a microgrid between grid-connected and islanded mode

Bandgap Energy: the difference in energy between the valence band and the conduction band in a semiconducting material, E_g

Battery Control Unit (BCU): the overall controls system formed when multiple battery modules are connected to form a battery pack

Battery Management System (BMS): the controls system for a battery energy system that monitors the battery's current, voltage, temperature, SoC, and device status; exchanges information and data to communicate with the Power Conditioning System

Battery: a contained system, or cell, that produces electricity via two electrodes (conductive metals) contained within an electrolyte (usually a liquid medium that allows the flow of ions or electrons) and connected through an electric load or wired to complete a circuit

Biomass: any organic or plant-based material that can be converted into energy such as wood or agricultural material

Black Start Services: the ability of a generating unit to start without an outside electrical supply, required to ensure reliable restoration of the grid after a blackout

Busbar: an electrical conductor or set of conductors used to collect and distribute electric current

Calendar Life: the lifetime of a battery due to the aging of the battery components due to the passage of time, regardless of usage patterns

Capacity/Resource Adequacy: an energy storage system that can be dispatched during high-demand events to supply energy and assist in providing power to the grid, referred to as shaving peak energy demand

Capacity: a measure of the amount of chemically active material a battery contains, calculated based on the weight of the metal electrodes and measured in amp-hours, or Ah

Charge Controller: a device used to control the charging rate of a battery system to ensure the batteries do not get overloaded during charging or fully depleted during discharge

Chemical Energy Storage: a system that stores energy for later use using the chemical energy density of certain chemicals, such as hydrogen

Circuit Breaker: a safety device designed to protect an electrical circuit from damage and prevent injury due to an electrical error like overcurrent or short circuit

Circuit: a closed system that contains a source of electrons, such as a battery or power source, connected to a resistive device, such as a light bulb, by conductors, such as electrical wire

Compressed Air Energy Storage (CAES): a mechanical energy storage device that uses excess electricity to compress air to high pressure, which can then be released to deliver energy

Conduction Band: the region of highest energy in a semiconducting material containing the conduction electrons of energy greater than the conduction energy, E_c

Conductor: a medium that conducts the flow of electricity, such as electrical wire

Conservation Voltage Reduction: the use of an energy storage system to reduce energy consumption by reducing the feeder voltage

Consumption Charges: the basic electricity billing usage rate, measured in $/kWh

Converter (DC/DC): an electrical device that converts the incoming current from one voltage to another, without changing the current type

Corrective Maintenance: maintenance activities that occur as the result of a failure to correct or repair failed system component(s)

C-rate: the rate of charging or discharging a battery, calculated by dividing the discharge current by the battery's capacity, expressed as a fraction of "C", or the capacity

Critical Loads Panel: an electrical panel that prioritizes certain critical loads by automatically switching off unnecessary electric devices to reduce electricity usage and extend the duration that a renewable system is able to ride through an outage

Current Surges: a sudden increase in current within a circuit beyond what is expected; can damage equipment or result in injury if proper protection equipment is not in place

Current: the flow of electrons through a circuit, measured in Amps, or A

Curtailment: the reduction in electricity delivered due to a transmission constraint (U.S. Department of Energy, 2015)

Cycle Life: the number of cycles (one cycle being a charge then discharge process) a battery is expected to achieve before its capacity falls below usable levels

Days of Autonomy: the duration of an outage that a renewable system is designed to supply electricity to a load without grid support

Demand: the rate at which an electric customer consumes electricity, measured in kW

Demand Charge: electricity billing based on the rate of electricity consumption for a set time period throughout the day

Demand Charge Reduction: the use of an energy storage system to reduce the maximum power draw by an electric load in order to avoid peak demand charges

Depth of Discharge: a measure of how much of a battery has been used, as a percentage of the battery's total capacity

Direct Current (DC): electricity flowing continuously in one direction; the constant flow of electrons in a wire

Direct Ownership: when the site-owner directly purchases the renewable system with available funds or loans

Distributed Energy Resource (DER): small scale energy generation or storage assets located within the distribution system of the grid

Distribution System: is the movement of electrical energy from the bulk transmission system at substations to individual customers at distribution transformers

Distribution Upgrade Deferral: when an energy storage system is used to reduce loading on a specific portion of the distribution system, thereby delaying the need to upgrade the distribution system to accommodate load growth or regulate voltage

Droop-based Controller: a controller used to synchronize multiple generators by regulating the frequency in response to changes in the load (Petrotech, 2017)

Electric Discharge: when the energy contained with a battery or power source is retrieved through a circuit; the rate at which this energy is retrieved is called the discharge current

Electric Field: describes the shape of the electric influence on charged particles such as an electron created by other charged particles or resulting from changes in a magnetic field

Electric Potential: the potential difference, or voltage, between two materials of different electrochemical properties required to cause the electrochemical reaction within a battery

Electrical Energy: the generation or use of electric power over a period of time; measured in kilowatt hours, or kWh (U.S. Department of Energy, 2015).

Electricity: the transfer or motion of electrons;
- **static electricity**: the transfer of electrons from one material to another;
- **current electricity**: the motion of electrons through a medium that conducts the flow of electricity

Electrochemical Energy Storage: a system that stores energy for later use by converting chemical energy into electrical energy, such as in a fuel cell

Electrodes: conductive metals of different voltages, or potential difference

Electrolyte: is typically a liquid medium that conducts the flow of ions or electrons between electrodes in a battery

Electrons: atomic particles that carry an electric charge of -1, abbreviated as e^-

Encapsulant: an electrically insulating material placed on either side of a solar cell; EVA, or ethylene-vinyl-acetate is a common encapsulant material

Energy Arbitrage: trading in the wholesale energy markets by buying energy during off-peak low-price periods and selling it during peak high-price periods

Energy Audit: a professional home or business energy assessment used to determine how much energy is used, where inefficiencies exist, and what improvements can be made to improve the comfort and efficiency of the building (U.S. Department of Energy, n.d.)

Energy Density: the ratio of energy contained within a certain volume of a substance; the more energy contained within a set amount of a substance, the greater its energy density

Energy Efficiency: a means of reducing energy demand while still benefiting from the same function of electricity; or performing the same function while requiring less energy input

Energy Equity: or Energy Justice, which seeks to ensure that all individuals have access to energy that is affordable, safe, sustainable, and capable of supporting a decent lifestyle, as well as the opportunity to participate in and lead energy decision-making processes with the authority to make change (Carley & Koninsky, 2020)

Energy Independence: the ability of a community or region that is able to meet its energy requirements locally without having to import energy from an outside party, such as electricity from a utility or fuel imported from another location

Evaporation: the process of turning a liquid into a vapor

Fault Current: the current at the point of electrical fault, or short-circuit event

Flexible Ramping: energy generation ramping capability provided in real time to meet the forecasted net load to cover upward and downward forecast error uncertainty

Flywheel: a mechanical energy storage device that uses excess electricity to spin a rotor attached to a motor that converts rotational energy into electricity

Frequency: the rate of oscillations of a wave, such as light; measured in Hertz, or Hz

Frequency Response: when an energy storage system provides energy to maintain frequency stability on the grid when it deviates outside the set limit, keeping generation and load balanced within the system

Fuel: a material that can be used to create thermal or chemical energy by a process such as heating, burning, or chemical reaction with another substance

Fuse: is an electrical safety device that is placed in an electrical circuit

Galvanic Cell: the building block of a battery or fuel cell, named after Luigi Galvani; also known as a voltaic cell

Generating Stations/Generator: a facility or machine that produces power via a chemical, physical, or thermal process

Geothermal: a form of energy derived from the heat within the Earth due to the increasing temperature as depth approaches the core

Greenhouse Gas Emissions: emissions or output of gases such as carbon dioxide (CO_2) that light can pass through, but infrared radiation cannot, which collect in the earth's atmosphere, preventing radiant energy from leaving the earth and creating a warming effect (U.S. Energy Information Administration, n.d.)

Grid-Connected Mode: when a microgrid operates in sync with the utility electric grid and is able to exchange electricity by either importing or exporting electricity as needed

Grounding: provides a path for the current in an electric circuit to flow through the ground rather than maintaining a dangerous voltage

Hydroelectric: is the use of flowing water through a turbine to generate electricity

Incandescent: describes any material that emits light by being heated, such as an incandescent light bulb that emits light when its wire filament is sufficiently heated

Insulation: a layer of material that prevents the flow of heat or electricity; an insulating material is the opposite of a conducting material

Interconnection: the connection between any grid-connected energy generation system and the utility electric grid; requires an interconnection agreement with the utility to ensure the safe interaction of the generation system with the grid

Inverter: an electrical device that converts direct current to alternating current, often paired with photovoltaic systems which generate energy in DC to allow connection to the AC electric grid

Ion: an atom that has either gained or lost an electron such that it becomes electrically charged; positively charged ions have lost an electron, negatively charged ions have gained an electron; the charge of an ion is +/- the number of electrons it has either gained or lost

Irradiance: the amount of radiation received by the surface of a solar cell, measured in Watts per meter squared, or W/m^2

Islanded Mode: the mode of operation of microgrid that is disconnected (via a switch) from the main grid to operate independently of the utility grid

Isochronous Generator Control System: a controls schema whereby the generators maintain a constant frequency; often used in standalone generators or for the largest generator on the grid (Petrotech, 2017)

Junction Box: an enclosure to house electrical wire connections

Lifecycle Cost: the true cost of a device or technology, such as a battery, that includes every aspect of the device's life, from its production through useful operation as well as the cost of recycling or disposal

Load Following: regulation of the power output of an energy storage system within a prescribed area in response to changes in the grid such as system frequency, tie line (transmission circuit) loading, or the relation of these to each other

Load Shedding: the process of deliberately removing selected demands from a power system in response to abnormal conditions such as a loss of generation to maintain the integrity of the system (U.S. Department of Energy, 2015)

Load: the amount of power demanded by a device or consumer, often referred to as demand

Magnetic Field: describes the shape of the magnetic influence on a charged particle or an electric current that is created by a magnetic material or is the result of changes in an electric field

Mechanical Energy Storage: a system that stores energy for later use using mechanical or physical processes, such as the spinning of a flywheel or the compression of chamber of air

Microgrid Controller: the brain of the microgrid system used to dispatch the DER safely and effectively; often utilize artificial intelligence to forecast demand patterns and weather forecasts to optimize the controls of the energy management

Microgrid: a group of interconnected loads and distributed energy resources within a clearly defined electrical boundary that acts as a single controllable entity with respect to the grid; capable of connecting and disconnecting to the grid as needed

Microturbines: small-scale gas turbines

Monocrystalline: a type of solar cell made from a single crystal of silicon; more efficient than polycrystalline silicon

Multijunction: a type of solar cell made of multiple semiconductors of different band gap energies stacked on top of each other to increase energy utilization

Nano-grid: a single domain of power encompassing power distribution, reliability, quality, capacity, price, and administration (Lawrence Livermore National Laboratory, 2016)

Non-Spinning Reserve: energy generation that is offline but capable of being brought onto the grid and synchronized within thirty minutes

Off-Gassing: the process of releasing a chemical, especially a harmful one, in the form of a gas

Off-Grid: when a microgrid is not connected to the main grid and operates as an independent system

Off-Peak: a time period in which demand for electricity is relatively low. Off-peak time periods can be the result of behavior patterns such as early morning when it is common to be sleeping rather than using electricity or the result of weather patterns such as mild Spring of Fall

temperatures that allow customers to open their windows rather than using heating or cooling devices.

One-Line Diagram: a representation of the components and electrical requirements of a microgrid or electrical system laid out using a single line block diagram

Overcurrent: any current greater than the rated current of the equipment in use which may result in an overload, short circuit, or ground fault

Overload: a hazardous condition that can lead to electric shock when too many devices are plugged into the same circuit without adequate overcurrent protection devices

Oxidant: a substance in a chemical reaction that gains electrons in the reaction through the process of electron transfer

Parallel: a method of wiring together electrical components such as solar cells, where the system of connected cells has the same overall current as the individual solar cells, but the total current equal to the sum of the induvial solar cell's currents

Peak: a time period in which demand for electricity is relatively high. Peak time periods can be the result of behavior patterns such as common times to prepare meals and do laundry or the result of weather events such as high and low temperatures requiring substantial cooling or heating loads.

Peaker Plants: expensive high-polluting fossil fuel plants only brought online in times of peak demand

Photon: the fundamental unit, or quanta of light; the properties of a photon can be described by its energy, wavelength, and frequency

Photovoltaics: technology that utilizes the photovoltaic principle, whereby the energy transported by light is converted directly into electrical energy

Pico-grid: an individual device with its own internal battery for isolated use or when external power sources are not available (Lawrence Livermore National Laboratory, 2016).

Plug-in Hybrid Electric Vehicles: cars that can plug into a power source to charge a battery pack and use gasoline to power an internal combustion engine like those found in non-electric vehicles (U.S. Energy Information Administration, n.d.)

Polycrystalline: a type of solar cell formed by merging multiple silicon crystals; less efficient than monocrystalline silicon

Power Purchase Agreement: a type of third-party ownership where the user pays the contracted owner/operator for the electricity generated without the terms of a leasing agreement

Power Reliability: the use of an energy storage system to reduce or eliminate power outages to consumers

Power: the measure of how quickly energy can be delivered, measured in Watts, or W

Preventative Maintenance: maintenance activities that are performed before the failure of a system component to avoid significant costs through loss of operation

PV Module: a series of solar cells arranged in a grid pattern and wired together, typically assembled within an aluminum frame and layered from top to bottom: front glass, front encapsulant, solar cells, back encapsulant, and back layer

PV Panel: a set of connected PV modules

PV Temperature Coefficient: a measure of how much power generation is lost as a solar panel's temperature rises above 25°C / 77°F; the efficiency of a solar panel is reduced as its temperature increases

Rate Structure/Tariff: describes the price of electricity, measured in $/kWh

Reactant: a substance used in a chemical reaction

Reactive Power: the out-of-phase component of the total volt-amperes in an electric circuit; measured in volt-ampere-reactive, or VAR; used to control voltage on the transmission network (U.S. Department of Energy, 2015)

Real Power: or active power—the portion of electrical flow capable of performing real work or energy transfer; measured in Watts, or W (U.S. Department of Energy, 2015).

Regulation: when an energy storage system operator responds to an area control error in order to provide corrective response to all or portion of a control area to correct difference between generation and load

Renewable: a source of electricity generation that can be replenished or replaced that is not considered a finite resource; solar, wind, geothermal, ocean, and hydroelectric generation are considered renewable

Resiliency: the ability to prepare for and adapt to changing conditions and withstand and recover rapidly from disruptions; includes the ability to withstand and recover from deliberate attacks, accidents, or naturally occurring threats and accidents

Resistance: the resistance to the flow of electrons through a circuit, measured in Ohms, or Ω

Resistance-Inductance Algorithms: a well-defined computer calculation tool to calculate resistance and inductance on the microgrid control system to prevent faults during reconnection after an islanded mode.

Resynchronization: reconnection of an islanded microgrid to the utility grid and synchronization of the voltage and frequency of the microgrid and utility grid

SCADA system: a Supervisory Control and Data Acquisition System used to control, collect, and store data in real-time to monitor and act in a microgrid system, interacting directly with sensors and electrical equipment to maintain safe and efficient microgrid operation

Second-Life: less-intensive uses that a battery system can fulfill after a battery's capacity has fallen below the threshold for usable capacity of its original function

Self-Discharge: occurs when a battery initiates the discharge process while not in use due to its own thermodynamic instabilities, leading to a loss in battery capacity

Semiconductor: a material with either inherent or imbued properties characterized by having a valance and conduction band, separated by a band gap energy; used to make photovoltaic cells

Series: a method of wiring together electrical components such as solar cells, where the series of connected cells has a resulting voltage equal to the sum of the individual solar cell's voltages, but the same overall current

Sinusoidal: or sine wave—a graphical shape that starts at the origin (or zero) and travels up to a certain height (amplitude) and then back down, past its starting point, down the same distance as the first portion (negative amplitude), and then back up to the start; the fundamental wave pattern that describes electromagnetic radiation, or light

Solar cell: the fundamental building block of a PV system, made of semiconducting material

Spinning Reserve: energy generation capacity that is online and capable of synchronizing to the grid within ten minutes

SQL: is a database management system used to store a lot of data. This is a common database tool for automation control systems to organize and store current and historical information.

State of Charge (SoC): the measure of a battery's capacity that is available for use, as a percentage of the battery's total capacity

String: a set of solar cells, modules, or panels connected in series

Substation: equipment that switches, steps down, or regulates the voltage of electricity; the control and transfer point on a transmission system (U.S. Department of Energy, 2015)

Switchgear: electrical switching and interrupting devices combined with control, instrumentation, metering, protection, and regulating devices for use in generation, transmission, distribution, and conversion of electric power (Lawrence Livermore National Laboratory, 2016)

Thermal Energy Storage: a system that stores energy for later use using thermal energy from either hot or cold sources such as bodies of water

Thermal Runaway: an uncontrolled and dangerous reaction caused by a buildup of excess heat within a battery that leads to damage to the battery and difficult-to-control fires

Thermodynamics: the study of the relationships between heat and energy

Thin-film: a type of solar cell made with extremely thin layers of semiconducting material, such as cadmium telluride (CdTe); flexible and often used for portable applications

Third-Party Ownership: when the renewable system located on a site is purchased and maintained by an outside company, such as in a solar lease where the electricity generated is purchased from that company to be consumed by the site owner

TOU Charge Reduction: reducing customer charges for electricity when the charges for electricity are specific to the time of day, week, or season when it is purchased

Transformer: an electrical device that changes the incoming AC electricity from a higher voltage to a lower voltage (step-down), or a higher voltage to a lower (step-down)

Transmission Congestion Relief: the use of an energy storage system to store energy when the transmission system is uncongested and provide relief during hours of high congestion

Transmission System: the bulk movement of electrical energy through transmission lines from generating sites to electrical substations

Transmission Upgrade Deferral: when an energy storage system is used to reduce loading on a specific portion of the transmission system, thereby delaying the need to upgrade the transmission system to accommodate load growth or regulate voltage

Valence Band: the region of lowest energy in a semiconducting material containing valence electrons of energy less than the valence energy, E_v

Voltage Support: energy generation providing reactive power onto the grid to maintain a desired voltage level

Voltage: the push of electrons through a circuit, measured in Volts, or V

Voltaic Cell: the building block of a battery or fuel cell, named after Alessandro Volta; also known as a galvanic cell

Voltmeter/Multimeter: a device used to measure the voltage, current, resistance, and other parameters in an electric circuit

Volt-VAR Control: management of the reactive power in the transmission and distribution system, where VAR is the volt-ampere reactive unit measuring reactive power in AC systems

Wavelength: the distance between successive crests of a wave, typically measured in nanometers, or nm

12.0 References

Alvarez Alvarado, M. S. & Jayaweera, D., 2020. Operational Risk Assessment with Smart Maintenance of Power Generators. *International Jouranl of Eelctrical Power & Energy Systems 117,* p. 105671.

Alvarez-Alvarado, M. S. & Jayaweera, D., 2020. Reliability-Based Smart-Maintenance Model for Power System Generators. *IET Generation, Transmission, & Distribution 14.9,* pp. 1770-1780.

Azimian, M., Amir, V. & Javadi, S., 2020. Economic and Environmental Policy Analysis for Emission Neutral Multi-Carrier Microgrid Deployment. *Applied Energy 277,* p. 115609.

Balducci, P., Alam, M. J. E., Hardy, T. D. & Wu, D., 2018. Assigning Value to Energy Stroage Systems. *Royal Society of Chemistry.*

Battery University, 2022. *BU-410: Charging at High and Low Temperatures.* [Online] Available at: https://batteryuniversity.com/article/bu-410-charging-at-high-and-low-temperatures

Bellido, M. H. & et al, 2018. Barriers, Challenges, and Opportunities for Microgrid Implementation: The Case of Federal University of Rio de Janeiro. *Journal of Cleaner Production 188,* pp. 203-216.

Bower, W. & Key, T., 2021. Status of Microgrid Protection and Related Standards and Codes: Protection Supports Integration. *IEEE Power and Energy Magaine vol. 19 no. 3,* pp. 83-92.

Carley, S. & Koninsky, D., 2020. The justice and equity implications of the clean energy transition. *Nature Energy,* pp. 569-577.

Choi, D. et al., 2021. Li-Ion Battery Technology for Grid Application. *Journal of Power Sources, vol. 511 No. 230419.*

Fu, J., Nunez, A. & De Schutter, B., 2020. A Short-Term Preventitive Maintenance Scheduling Method for Distribution Networks with Distributed Generators and Batteries. *IEEE Transactions on Power Systems 36.3,* pp. 2516-2531.

Haney, J. & Burstein, A., 2013. PV System Operations and Maintenance Fundamentals. *Solar America Board for Codes and Standards Report.*

Hausman, N., 2018. *A Homeowner's Guide to Solar Financing: Leases, Loans, and PPAs,* s.l.: Clean Energy States Alliance.

Hilal, K., Bialek, T. & Abcede, L., 2019. Borrego Springs: California's First Renewable Energy-Based Community Microgrid. *California Energy Commission.*

Hirsch, A., Parag, Y. & Guerrero, J., 2018. Microgrids: A Review of Technologies, Key Drivers, and Outstanding Issues. *Renewable and Sustainable Energy Reviews 90 ,* pp. 402-411.

Hooshyar, A. & Iravani, R., 2017. Microgrid Protection. *In Proceedings of the IEEE, vol. 105 no. 7,* pp. 1333-1353.

Jager, K. et al., n.d. *Solar Energy: Fundamentals, Technology, and Systems,* 2014: Delft University of Technology.

Kalaiselvam, S. & Parameshwaran, R., 2014. Thermal Energy Storage Technologies. *Academic Press,* pp. 57-64.

Kempener, R., 2022. Off-grid Renewable Energy Systems: Status and Methological Issues. *The International Consulting-Specifying Engineer.*

Kurnik, C. & Voss, P., 2020. Financing Microgirds in the Federal Sector. *National Renewable Energy Lab.*

Lawrence Livermore National Laboratory, 2016. *Grid Architecture Power Systems Glossary.* [Online]

Available at:
https://gridarchitecture.pnnl.gov/media/methods/Grid%20Architecture%20Glossary%20LLNL-MI-723064.pdf

Messenger, R. & Ventre, J., 2010. *Photovoltaic Systems Engineering,* s.l.: CRC Press.

Mongrid, K., 2020. 2020 Grid Energy Storage Technology Cost and Performance Assessment. *Energy.*

Odrowski, A., Webb, D. & Decoster, N., 2022. How do Microgrids Relate to the National Electrical Code. *Consulting-Specifying Engineer.*

Office of Energy Efficiency & Renewable Energy, 2022. *Energy Efficiency.* [Online]
Available at: https://www.energy.gov/eere/energy-efficiency#:~:text=The%20Office%20of%20Energy%20Efficiency,sectors%20of%20the%20U.S.%20economy.
[Accessed 2022].

OSHA Office of Training and Education, 2018. *Electrical Safety.* [Online]
Available at: https://www.osha.gov/sites/default/files/2018-12/fy11_sh-22249-11_ElectricalSafety.ppt
[Accessed 2022].

Oueid, R. K., 2019. Microgrid Finance, Revenue, and Regulation Considerations. *The Electricity jouranl 32.5,* pp. 2-9.

Parhizi, S., Lotfi, H., Khodaei, A. & Bahramirad, S., 2015. State of the Art in Research of Microgrids: A Review. *IEEE.*

Petrotech, 2017. *The Difference Between Isochronous and Droop Control Modes.* [Online]
Available at: https://petrotechinc.com/the-difference-between-isochronous-and-droop-control-modes/#:~:text=The%20main%20difference%20between%20droop,response%20to%20changes%20in%20load.
[Accessed 2022].

Petrovic, S., 2021. Battery Technology Crash Course: A Concise Introduction. *Happy Valley: Springer.*

Price, C. et al., 2021. *Understanding your Utility Bills: Electricity,* s.l.: U.S. Department of Energy.

Sakshi, M., 2020. Microgrid Resilience: A Holistic Approach for Assessing Threats, Identifying Vulnerabilities, and Designing Corresponding Mitigation Strategies. *Applied Energy 264: 144726.*

Salam, A., Azah, M. & Hannan, M. A., 2008. Technical Challenges on Microgrids. *ARPN Journal of Engineering and Applied Sciences 3.6,* pp. 64-69.

Shea, D., 2022. *Microgrids: State Policies to Bolster Energy Resilience.* [Online]
Available at:

https://www.ncsl.org/Portals/1/Documents/energy/Microgrids_Energy_Resilience_f04_37987.pdf

Shively, B. & Ferrare, J., 2019. *Understanding Today's Electricity Business.* s.l.:Enerdynamics Corp.

Solar Energy Technologies Office, n.d. *Photovoltaic Basics.* [Online]
Available at: https://www.energy.gov/eere/solar/solar-photovoltaic-cell-basics
[Accessed 2022].

Tarekegne, B., O'Neil, R. & Twitchell, J., 2021. Energy Storage as an Equity Asset. *Current Sustainable/Renewable Energy Reports vol. 9,* p. 7.

U.S. Department of Energy, 2015. *United States Electricity Industry Primer.* [Online]
Available at: https://www.energy.gov/sites/prod/files/2015/12/f28/united-states-electricity-industry-primer.pdf
[Accessed 2022].

U.S. Department of Energy, n.d. *Energy Saver.* [Online]
Available at: https://www.energy.gov/energysaver/home-energy-assessments

U.S. Energy Information Administration, n.d. *Glossary.* [Online]
Available at: https://www.eia.gov/tools/glossary

UMassAmherst, 2020. Lead Acid, Lithium-Ion, and Lithium Batteries. *Environmental, Health, and Safety, UMassAmherst, Massachusetts.*

US Department of Energy, 2013. *DOE Handbook: Electrical Safety.* [Online]
Available at: https://www.standards.doe.gov/standards-documents/1000/1092-BHdbk-2013/@@images/file
[Accessed 2022].

Warneryd, M., Hakansson, M. & Karltorp, K., 2020. Unpacking the Complexity of Community Microgrids: A Review of Institutions' Roles for Development of Microgrids. *Renewable and Sustainable Energy Reviews 121: 109690.*

Pacific Northwest National Laboratory

902 Battelle Boulevard
P.O. Box 999
Richland, WA 99354

1-888-375-PNNL (7665)

www.pnnl.gov