ATP 4-25.12

Unit Field Sanitation Teams

APRIL 2014

INCORPORATING CHANGE 2, AUGUST 2025

DISTRIBUTION RESTRICTION: Approved for public release; distribution is unlimited.

Headquarters, Department of the Army

This publication is available at the Army Publishing Directorate site (https://armypubs.army.mil), and the Central Army Registry site (https://atiam.train.army.mil/catalog/dashboard)

Change 2
Army Techniques Publication
No. 4-25.12

Headquarters
Department of the Army
Washington, D.C, 08 August 2025

Unit Field Sanitation Teams

1. This changed the term gender to sex in accordance with Executive Order 14168.

2. A plus character (+) marks new material.

3. ATP 4-25.12, 08 August 2025, is changed as follows:

Change Version Pages	Change Description
page 2-4	corrects text in paragraph 2-23
page 8-2	corrects text in paragraph 8-11
page 8-3	corrects text in paragraph 8-18

4. An updated Authentication Page has amended the prior authentication reflected after Change 1 and in the rear of this publication.

DISTRIBUTION RESTRICTION: Approved for public release; distribution is unlimited.

This page intentionally left blank.

Army Techniques Publication
No. 4-25.12

Headquarters
Department of the Army
Washington, DC, 30 April 2014

Unit Field Sanitation Teams

Contents

Page

PREFACE vii

INTRODUCTION ix

Chapter 1 UNIT FIELD SANITATION TEAMS 1-1
History 1-1
Contemporary Operations 1-1
Importance of the Unit Field Sanitation Teams 1-1

Chapter 2 HEALTH THREATS TO SOLDIERS IN THE FIELD 2-1
Health Threats 2-1
Preventive Medicine Measures 2-1
Section I — Soldier Responsibilities 2-2
Individual Soldiers 2-2
Section II — Commanders and Unit Leaders Responsibilities 2-10
Commanders and Leaders 2-10

Chapter 3 UNIT WATER SUPPLY 3-1
Section I — Maintaining Unit Water Supply 3-1
Importance of Water 3-1
Section II — Sources of Water in the Field 3-3
Sources of Water 3-3
Approved Uses of Potable and Nonpotable Water 3-4
Section III — Waterborne Pathogens 3-6
Commonly Encountered Waterborne Pathogens 3-6
Bacterial Infections 3-6
Protozoan Infections 3-9
Viral Infection 3-10
Section IV — Approved Field Water Disinfectants 3-11
Water Disinfectants Used at Unit-Level 3-11
Calcium Hypochlorite 3-11
Effectiveness of Chlorine Disinfection 3-11
Determining Chlorine Residual 3-12

Distribution Restriction: Approved for public release; distribution is unlimited.

***This publication supersedes FM 4-25.12 (FM 21-10-1) dated 25 January 2002.**

Rechlorinating Unit Bulk Water Supplies 3-13
Section V — Water Storage Systems 3-18
Bulk Water Storage Systems 3-18
Individual Water Storage Systems 3-18
Section VI — Approved Water Purification Procedures.....3-19
Calcium Hypochlorite to Disinfect Bulk Water Supplies.....3-19
Using Calcium Hypochlorite to Disinfect Canteens.....3-19
Using the Chlorination Kit (Water Purification) for Personal Hydration Systems3-19
Using Iodine Tablets.....3-21
Section VII — Inspecting, Cleaning, and Sanitizing Water Storage Equipment.....3-22
Inspecting Water Storage Equipment 3-22
Cleaning and Sanitizing Water Storage Equipment.....3-22

Chapter 4 FOOD SERVICE SANITATION 4-1
Role of the Unit Field Sanitation Teams.....4-1
Section I — Foodborne Pathogens 4-1
Most Common Foodborne Pathogens 4-1
Importance of Sanitary Practices in Food Handling.....4-3
Transporting Meals.....4-4
Section II — Hygiene Standards for Food Handlers.....4-6
Food Service Personnel and Detailed Servers 4-6
Section III — Pest Control 4-7
Insects 4-7
Rodents 4-7

Chapter 5 WASTE MANAGEMENT 5-1
Importance of Waste Management.....5-1
Role of the Unit Field Sanitation Teams.....5-1
Classification of Waste Materials 5-1
Management and Disposal of Waste Materials 5-1
Disposal Methods for Nonhazardous Solid Waste.....5-2
Wastewater 5-5
Disposal Methods for Gray Water 5-5
Disposal Methods for Black Water 5-10
Latrines.....5-12
Urine Disposal Facilities.....5-20

Chapter 6 PEST MANAGEMENT.....6-1
General.....6-1
Section I — Mammals 6-1
Rodents 6-1
Commonly Encountered Rodents 6-7
Control Techniques for Rodents 6-12
Feral Animals 6-13
Rabies 6-14
Section II — Arthropods 6-15
Arthropods of Military Significance.....6-15

Management of Arthropods 6-20
Management Through Individual Preventive Medicine Measures 6-22
Proper Wear of the Uniform 6-24

Chapter 7 HEAT INJURY 7-1
Heat Injury 7-1
Section I — Basics of Heat Injury Risk 7-1
Threat 7-1
Defense 7-1
Acclimatization 7-2
Risk Factors 7-2
Section II — Types of Heat Injury and Heat-Related Conditions 7-2
Heat Cramps 7-2
Heat Exhaustion 7-3
Heat Stroke 7-3
Heat Rash 7-3
Sunburn 7-3
Skin Cancer 7-4
Rhabdomyolysis 7-4
Hyponatremia 7-4
Section III — Prevention Strategies 7-4
Acclimatization 7-4
Section IV — Heat Injury Prevention Tools 7-6
Training and Education 7-6
Heat Injury Controls 7-8
Wet Bulb-Globe Temperature Index 7-9
Additional Resources 7-10

Chapter 8 COLD INJURY 8-1
Cold Injuries 8-1
Section I — Basics of Cold Injury Risk 8-1
Cold Injury Factors 8-1
Section II — Cold and Wet (Nonfreezing) Cold Injuries 8-4
Cold and Wet Injuries 8-4
Hypothermia 8-4
Chilblains 8-5
Immersion Syndrome (Trench Foot) 8-6
Section III — Cold and Dry (Freezing) Injuries 8-6
Cold and Dry Injury 8-6
Frostbite 8-7
Degrees of Frostbite 8-7
Section IV — Other Conditions Associated With Cold Weather 8-8
Dehydration 8-8
Carbon Monoxide Poisoning 8-9
Snow Blindness 8-9
Section V — Cold Injury Prevention Tools 8-10
General Guidance for All Cold-Weather Training 8-10

Chapter 9 TOXIC INDUSTRIAL MATERIAL HAZARDS 9-1
Toxic Industrial Materials 9-1
Potential Health Effects 9-1
Toxic Industrial Material Classifications 9-1
Routes of Entry 9-2
Chemical Actions and Effects 9-3
Commonly Encountered Toxic Gases and Liquids 9-3
Prevention and Control 9-6
Reporting Toxic Industrial Material Exposure 9-7

Chapter 10 NOISE HAZARDS 10-1
Noise 10-1
Factors Determining the Degree of Hazard 10-1
Types of Noise 10-1
Hearing Loss Preventive Medicine Measures 10-3
Earplugs 10-4
Earmuffs 10-6
Tactical Communication and Protection Systems 10-7

Chapter 11 EXERCISE COLLAPSE ASSOCIATED WITH SICKLE CELL TRAIT 11-1
Sickle Cell Trait 11-1
Risk Factors 11-1
Signs and Symptoms 11-1
Preventive Measures 11-2
Command Responsibilities 11-2

GLOSSARY Glossary-1

REFERENCES References-1

INDEX Index-1

Figures

Figure 5-1. Improvised barrel incinerator 5-3
Figure 5-2. Garbage burial pit 5-4
Figure 5-3. Standard soakage pit 5-6
Figure 5-4. Soakage trench with barrel filter grease trap 5-7
Figure 5-5. Baffle grease trap 5-8
Figure 5-6. Barrel filter grease trap 5-8
Figure 5-7. Evaporation bed 5-9
Figure 5-8. Three-tier evaporation beds 5-9
Figure 5-9. Field wash stand 5-11
Figure 5-10. Improvised handwashing facility 5-12
Figure 5-11. Portable latrine systems 5-13
Figure 5-12. Chemical latrines 5-13
Figure 5-13. Containerized latrine subsystem 5-14
Figure 5-14. Cat-hole latrine 5-14

Figure 5-15. Straddle trench latrine 5-15
Figure 5-16. Mound latrine 5-15
Figure 5-17. Deep pit latrine 5-16
Figure 5-18. Bored-hole latrine 5-16
Figure 5-19. Properly closed latrines 5-17
Figure 5-20. Pail latrine 5-18
Figure 5-21. Single seat open-air burn-out latrine 5-18
Figure 5-22. Multiple seat enclosed burn-out latrine 5-19
Figure 5-23. Proper method for igniting fuel in a burn-out latrine 5-20
Figure 5-24. Urine soakage pit with pipe urinals 5-21
Figure 5-25. Trough urinal 5-22
Figure 5-26. Urinoil 5-22
Figure 6-1. Norway rat, *Rattus norvegicus* 6-7
Figure 6-2. Roof rat, *Rattus rattus* 6-9
Figure 6-3. House mouse, *Mus musculus* 6-10
Figure 10-1. Triple-flange earplug 10-4
Figure 10-2. Quad-flange earplug 10-5
Figure 10-3. Nonlinear double- and single-ended earplugs 10-5
Figure 10-4. Foam, hand-formed earplug 10-6
Figure 10-5. Earplug carrying case 10-6
Figure 10-6. Type II earmuffs 10-7

Tables

Table 1-1. Disease and nonbattle injury rates in contemporary operations 1-1
Table 3-1. Approved potable and nonpotable water uses 3-5
Table 3-2. Recommended field water chlorine residuals 3-14
Table 3-3. Chlorine dose calculator using five percent liquid (household) bleach 3-15
Table 3-4. Chlorine dose calculator using 70 percent high-test hypochlorite or solution concentrate 3-16
Table 3-5. Equivalent volumes chart 3-17
Table 3-6. Common fractions and their decimal equivalents 3-17
Table 3-7. Instructions for using the chlorination kit (water purification) 3-20
Table 3-8. Chlorination kit (water purification) tablet or powder sachet addition instructions 3-21
Table 6-1. Diseases associated with rodents 6-2
Table 6-2. Arthropods of military importance and the major diseases they transmit 6-16
Table 7-1. Benefits of heat acclimatization 7-5
Table 7-2. Examples of work and their classification 7-6
Table 7-3. Heat acclimatization recommendations for Soldiers 7-7
Table 7-4. Work/rest and water consumption guide 7-8
Table 8-1. Windchill chart 8-11
Table 8-2. Wet windchill chart 8-12

Table 8-3. Preventive measures to reduce the risk of frostbite 8-13
Table 10-1. Examples of steady noise 10-2
Table 10-2. Examples of impulse noise 10-2
Table 10-3. Triple-flange earplug, color, size, and distribution information 10-5

Preface

This Army Techniques Publication (ATP) 4-25.12 provides guidance for establishing, training, and employing unit field sanitation teams. Implementation of the techniques presented in this publication will enable commanders to maintain a fit and healthy force capable of accomplishing the mission in any environment.

The principal audience for ATP 4-25.12 is all commanders, leaders, unit field sanitation teams, individual Soldiers, Department of the Army Civilians, and military contractors.

Commanders, staffs, and subordinates ensure their decisions and actions comply with applicable United States, international, and, in some cases, host-nation laws and regulations. Commanders at all levels ensure their Soldiers operate in accordance with the law of war and the rules of engagement. (See Field Manual [FM] 6-27).

This publication is in consonance with the following North Atlantic Treaty Organization Standardization Agreements:

TITLE	NATO STANAG
Deployment Pest and Vector Surveillance and Control - AMedP -4.2 Edition A	2048
Requirement for Training in Casualty Care and Basic Hygiene for All Military Personnel - AMedP - 8.15 Edition A	2122
Requirements for Water Potability During Field Operations and in Emergency Situations - AMedP - 4.9 Edition A	2136
Emergency Supply of Water in Operations	2885
Allied Joint Medical Force Health Protection Doctrine - AMedP -4.0 Edition A	2561

This publication uses joint terms where applicable. Selected joint and Army terms and definitions appear in both the text and the glossary. This publication is not the proponent for any Army terms.

Army Techniques Publication 4-25.12 applies to the Active Army, Army National Guard/Army National Guard of the United States, and the United States Army Reserve unless otherwise stated.

The proponent of ATP 4-25.12 is the United States Army Medical Center of Excellence. The preparing agency is the Doctrine Literature Division, United States Army Medical Center of Excellence. Send comments and recommendations on Department of Army (DA) Form 2028 (*Recommended Changes to Publications and Blank Forms*) to Commander, United States Army Medical Center of Excellence, ATTN: ATMC-FD (ATP 4-25.12), 2377 Greeley Road, Building 4011, Suite B, JBSA Fort Sam Houston, TX 78234-7731; by email to usarmy.jbsa.medical-coe.mbx.ameddcs-medical-doctrine@army.mil or submit an electronic DA Form 2028.

This page intentionally left blank.

Introduction

Army Techniques Publication 4-25.12 remains generally consistent with Field Manual 4-25.12 on key topics while adopting updated terminology and concepts as necessary. These topics include discussion of operational and mission variables which commanders must consider when determining the need for more trained field sanitation teams to support the Soldiers when deploying.

The material presented in this publication reflects enduring practices of basic field hygiene and sanitation and preventive medicine measures. Implementation of these techniques and procedures enable commanders to preserve the health of their Soldiers in order for them to accomplish their mission.

Summary of changes include—

- Incorporating changes directed by Army Regulation 350-1, which requires commanders of deploying units to establish, appoint, and train at least two unit field sanitation teams.
- Expanding this publication from ten chapters (as outlined in Army Techniques Publication 4-25.12) to eleven chapters.

Army Techniques Publication 4-25.12, C1 consists of eleven chapters—

- Chapter 1 includes a brief history of the unit field sanitation team, highlights its success, contributions, and importance as a force health protection asset.
- Chapter 2 identifies health threats to Soldiers while in the field or deployed and articulates individual and leader responsibilities for implementation and enforcement of preventive medicine measures.
- Chapter 3 identifies the critical importance of potable water to Soldiers, identifies sources of water in the field, and outlines methods to disinfect water for safe consumption.
- Chapter 4 discusses the techniques and procedures for properly preparing, safely transporting, and serving meals in the field.
- Chapter 5 addresses the importance of properly disposing of human waste and wastewater generated by shower and food preparation facilities.
- Chapter 6 identifies pests commonly encountered by Soldiers in the field and then identifies techniques and procedures for pest avoidance and management.
- Chapter 7 identifies types of heat injury, their causes, and prevention techniques to protect Soldiers in the field.
- Chapter 8 identifies types of cold injury, their causes, and prevention techniques to protect Soldiers in the field.
- Chapter 9 identifies toxic industrial material hazards commonly associated with military operations.
- Chapter 10 identifies noise hazards associated with military operations and provides proven protection measures to protect Soldiers' hearing.
- Chapter 11 identifies the condition of exercise collapse associated with sickle cell trait.

This page intentionally left blank.

Chapter 1
Unit Field Sanitation Teams

HISTORY

1-1. Historically, in every conflict up through World War II, in which the United States was involved, approximately 20 percent of hospital admissions were the result of combat injuries. The other 80 percent were the result of disease and nonbattle injury. In some areas the incidence of disease was so severe that entire divisions became combat ineffective.

Note. A disease and nonbattle injury casualty is defined as a Soldier who is lost to an organization by reason of disease or injury and who is not a battle casualty.

1-2. The problem was so severe that the United States War Department ordered the establishment of antimalaria details within every company, battery, or similar sized unit. Once established and trained, antimalaria details were very successful in reducing the incidence of arthropodborne disease. As a result of their success the antimalaria details were redesignated as unit field sanitation teams and their duties and responsibilities were significantly increased.

CONTEMPORARY OPERATIONS

1-3. United States military forces are frequently required to operate in some of the harshest environments on earth. Many of these areas present significant health threats which can quickly result in the spread of disease and increased incidences of nonbattle related injuries if not properly addressed. Disease and nonbattle injury rates from 1991 to 2003 are depicted in table 1-1.

Table 1-1. Disease and nonbattle injury rates in contemporary operations

Percentage of casualties attributed to disease and nonbattle injury	
Operation Desert Shield/Desert Storm, 1991	6.5 percent
Operation Joint Endeavor, 1995	7.1 percent
Operation Joint Guardian, 1999	8.1 percent
Operation Enduring Freedom, 2001	5 percent
Operation Iraqi Freedom, 2003	4 percent

IMPORTANCE OF THE UNIT FIELD SANITATION TEAMS

1-4. The drop in disease and nonbattle injury rates as reflected in table 1-1 is due largely to the efforts of well trained, appropriately equipped, and command supported unit field sanitation team members. Unit field sanitation team members who understand and appreciate the importance of their mission are extremely effective in assisting the commanders' efforts to prevent disease and nonbattle injury related losses to the unit.

1-5. Countering health threats that Soldiers are confronted with is as simple as implementing and enforcing unit-level field hygiene and sanitation practices and monitoring individual preventive medicine measures. These are the reasons for which the unit field sanitation team was created and which continue to

make it the most effective tool that commanders have at their disposal to ensure that their Soldiers remain healthy and fit to accomplish the mission.

1-6. It is absolutely critical that commanders—

- Provide command emphasis regarding the importance of field hygiene and sanitation and preventive medicine measures.
- Set the example of the importance of the program for their Soldiers.
- Enforce the standards set for the use of preventive medicine measures.
- Select only the very best Soldiers to staff the field sanitation teams.
- Ensure that their teams are well trained and equipped to perform their duties.

ESTABLISHING UNIT FIELD SANITATION TEAMS

1-7. Establishing and employing unit field sanitation teams is covered in Army Regulations 40-5, 350-1, and Department of the Army Pamphlet 40-11. These publications direct commanders of all company-sized units to establish, train, equip, and deploy unit field sanitation teams.

Note. Army Regulation 350-1 directs commanders of all company-sized units to appoint and train ***two unit field sanitation teams (a primary and an alternate)*** prior to deployment.

MISSION

1-8. The mission of the unit field sanitation team is to assist commanders in maintaining the health and the well-being of the Soldiers assigned to the unit. They accomplish this by—

- Performing arthropod and rodent management control measures within the unit area.
- Supervising the disinfection of unit bulk water supplies and monitoring residual chlorine levels.
- Teaching Soldiers—
  - Individual water purification techniques.
  - The dangers of consuming food and drinks from unapproved sources.
- Inspecting unit-level food service personnel, feeding facilities, and food service equipment.
- Supervising the—
  - Placement, construction, and maintenance of unit-level garbage disposal facilities and soakage pits.
  - Placement, construction, and maintenance of field latrines and urinals and then conducting regular sanitation inspections.

Note. Unit details, not the field sanitation team members, are responsible for constructing and maintaining field waste disposal facilities.

- Providing—
  - Training, guidance, and inspections of personnel hygiene practices to establish and maintain high levels of personal hygiene.
  - Information and assistance relating to individual preventive medicine measures to include use of the Department of Defense Insect Repellent System.
- Assisting in the selection of unit field sites and reporting the presence and location of suspected toxic industrial materials as necessary.
- Identifying and posting noise hazards in the unit area. Providing the unit commander a list of potential hazards within the unit area.
- Reporting findings of inspections to the unit commander.

1-9. Soldiers selected for unit field sanitation teams must have the confidence and support of the commander and be given sufficient time to perform their duties adequately.

ORGANIZATION

1-10. The unit field sanitation teams consist of one noncommissioned officer and one enlisted Soldier. In units with organic medical personnel, the noncommissioned officer should be a medical noncommissioned officer. Soldiers appointed to field sanitation teams should have at least six months of service remaining with the unit after completion of certification training.

ASSIGNMENT

1-11. Unit field sanitation teams are established within company-, battery-, and similar-sized units.

DEPENDENCIES

1-12. Unit field sanitation teams are dependent on support from preventive medicine personnel at brigade and echelons above brigade for—

- Field sanitation team certification training.
- Field screening and presumptive analysis of water supplies.
- Basic pest management and surveillance.
- Limited application of pesticides.
- Limited medical surveillance.

EMPLOYMENT

1-13. Unit field sanitation teams are employed within company-, battery-, and similar-sized units while deployed or when operating in the field for extended periods of time.

FIELD SANITATION TEAM TRAINING

1-14. Field sanitation team training should be conducted under field conditions. The certification course consists of 40 hours of—

- Classroom instruction.
- Demonstrations on the proper use and maintenance of field sanitation team equipment (field sanitation kit, National Stock Number 4540-01-578-4352).
- Practical exercises designed to test the Soldiers competence.

1-15. At the end of the training program, Soldiers are administered an examination which consists of 50 questions. After the successful completion of the training program and the examination Soldiers are awarded field sanitation team certification.

1-16. Field sanitation team certification training must be conducted when—

- Commanders appoint Soldiers to perform as members of unit field sanitation teams.
- Members of the unit field sanitation teams require sustainment training.
- Units are scheduled to operate in the field for extended periods of time or when deploying.

Note. Establishing and training additional field sanitation teams can be beneficial in situations where commanders are responsible for establishing a presence in multiple locations. This is especially true in situations where the terrain, distance between locations, and the tactical situation make it difficult for two teams to adequately support the Soldiers at those locations.

1-17. Unit field sanitation team course standards and training support packages are established and maintained by the Director, Distributed Learning Division, MCCS-HC-DL, Academy of Health Sciences, United States Army Medical Department Center and School, 3599 Winfield Scott Road, Room 2106, JBSA Fort Sam Houston, Texas 78234, Commercial: (210) 221-8461, or Defense Switching Network: 471-8161.

This page intentionally left blank.

Chapter 2

Health Threats to Soldiers in the Field

HEALTH THREATS

2-1. Historical accounts of wars, battles, and military training consistently show that the majority of losses to armies are not the result of combat injuries but rather disease and nonbattle injury.

2-2. The rigors of extended deployments and conducting operations in austere environments present significant challenges to a Soldier's ability to maintain basic standards of hygiene and sanitation. Health threats to Soldiers in the field include—

- Endemic diseases.
- Food and waterborne diseases.
- Hazardous plants and animals.
- Entomological hazards (nuisance pests and disease-carrying vectors).
- Toxic industrial materials (industrial and agricultural).
- Deployment-related stress.
- Hazardous noise.
- Climatic or environmental extremes (heat, cold, wind-blown sand, or other particulates).

PREVENTIVE MEDICINE MEASURES

2-3. Preventive medicine measures are simple, common sense actions that every Soldier can perform. Adhering to basic field hygiene and sanitation practices combined with the application of preventive medicine measures significantly reduces the spread of disease and greatly reduces or eliminates the incidence of disease and nonbattle injury.

Note. Implementation and supervision of preventive medicine measures must be an item of command interest and must be constantly observed and reinforced at all levels of leadership.

2-4. The principles of preventive medicine measures are—

- Soldiers perform individual techniques of preventive medicine measures.
- Field sanitation teams train Soldiers in preventive medicine measures and advise the commander and unit leaders on implementation of unit-level preventive medicine measures.
- Chain of command plans for and enforces preventive medicine measures.

2-5. To ensure Soldiers remain healthy and are fit for duty, specific steps must be taken prior to, during, and after every deployment.

2-6. Unit field sanitation teams can actively promote personal hygiene of Soldiers by arranging for prefabricated or field expedient handwashing stations, showers, and lavatory facilities. Ideally these facilities should have hot running water for Soldiers to attend to their personal needs such as shaving and oral hygiene. These facilities should take into account the mix of male and female Soldiers and must not only provide for privacy but also the security of the Soldiers using them.

2-7. Handwashing devices must be provided outside of latrine enclosures and in food service areas. They may also be set up at other points in the company area.

2-8. These facilities must be constructed so that they operate easily and must be kept stocked with—

- Potable water for washing.
- Soap.
- Paper towels.

2-9. If not provided with wastewater collection systems, all washing and shower facilities must be built on or placed over soakage pits to prevent water from collecting and forming pools.

2-10. Field sanitation team members provide Soldiers with guidance or instruction as needed concerning the hazards of neglected personal hygiene. They assist unit commanders in inspecting their Soldiers and their billets. These inspections are designed to ensure that every Soldier is practicing adequate personal hygiene, including body, hair, and teeth; airing sleeping bags; wearing clean clothes (including socks); and properly disposing of refuse. Moreover, enforcement of sanitary control measures pertaining to all camp facilities encourages Soldiers to have more pride in their personal hygiene.

SECTION I — SOLDIER RESPONSIBILITIES

INDIVIDUAL SOLDIERS

2-11. Army Regulation 40-5 states that every Soldier is responsible for his own well-being and that he will implement and employ all protective measures possible to preserve his health. Each Soldier, as a minimum, will protect against—

- Heat injury in hot and sunny climates by following work/rest and water consumption guidelines, by properly adhering to uniform wear policies, and by using sunscreen on exposed body parts.
- Cold injury in cold climates by wearing proper cold-weather clothing and frequently changing socks to keep feet dry, by careful handling of gasoline-type liquids, and by avoiding contact between skin and cold metal.
- Mosquito, fly, tick, and other arthropodborne diseases by using insect repellents, netting, and insecticide aerosols; by taking approved chemoprophylaxis; and by wearing the uniform properly.
- Enteric diseases by using water purification tablets whenever water quality is uncertain and by avoiding foods prepared by unapproved food vendors, and by properly disposing of bodily wastes.
- Skin diseases by washing the body as often as practicable.

PERSONAL HYGIENE

2-12. While in garrison, Soldiers generally maintain high standards of personal hygiene. This is due in part to the availability of latrine facilities that are kept at comfortable temperatures and have hot and cold running water. However, these conveniences might not be as readily available in the field, which may lead usually well-groomed Soldiers to be less inclined to maintain their personal grooming standards. Poor personal hygiene in the field is a difficult problem to overcome because it requires a sense of responsibility on the part of each Soldier to maintain personal hygiene practices regardless of the difficulties involved. Leadership must be proactive in this matter making sure that Soldiers have regular access to shower facilities and that Soldiers are using them.

2-13. Regular showering is important because a clean body is less susceptible to disease. Changing dirty socks frequently protects the feet from becoming more susceptible to disease. Unwashed clothing worn for prolonged periods of time and unwashed hair can provide a fertile environment for lice.

PERSONAL HYGIENE SUPPLIES

2-14. When preparing for the field or extended deployments, Soldiers should consider packing a two-month's supply of standard toiletry articles that can last until sustainment of these items is assured. A Soldier's personal hygiene supplies may include, but is not limited to, the following items:

- Absorbent body powder.

- Antiperspirant/deodorant.
- Comb.
- Dental floss.
- Department of Defense-approved insect repellent.
- Eye drops.
- Feminine hygiene products.
- Foot powder.
- Hair bands.
- Hair pins.
- Hairbrush.
- Hand sanitizer.
- Lip balm.
- Prescription medications (for example, birth control, blood pressure).
- Sanitizing wipes.
- Shampoo.
- Shaving kit.
- Soap.
- Sunscreen lotion.
- Toilet tissue.
- Toothbrush.
- Toothpaste.
- Towels.
- Washcloths.

Note. Sunscreen and Department of Defense-approved insect repellent are available to each Soldier assigned or attached to the unit through the field sanitation team supply sets.

2-15. Soldiers must not share toiletry articles with others as this may lead to the spread of disease and infections.

HANDWASHING AND SANITIZING

2-16. One of the most effective practices that Soldiers can perform to protect themselves and others from the spread of disease is to thoroughly wash or sanitize their hands frequently. Regular washing/sanitizing of the hands denies disease-causing bacteria and viruses from gaining easy entry into the body. Soldiers who fail to wash their hands frequently increase the risk of spreading germs picked up from other sources and possibly infecting themselves when touching their eyes, nose, or mouth. One of the most common ways Soldiers catch a cold is by rubbing their nose or their eyes with an unwashed hand which has been contaminated with a cold-causing virus.

2-17. Germs can be spread directly to others or onto surfaces that others might touch which may cause other Soldiers around you to become sick. The important thing to remember is that, in addition to colds, serious diseases like infectious diarrhea and meningitis can easily be prevented when Soldiers make a habit of frequently washing their hands.

2-18. When to wash and or sanitize the hands (at a minimum)—

- Before eating or snacking.
- After eating or snacking.
- Before handling and or preparing food.
- After using the latrine.
- After handling anything that could potentially transfer germs.
- Frequently during the work day to keep your hands free of germs.

- After coming into contact with any local flora or fauna.
- After physical contact with local nationals.

Note. Maintain cultural awareness to ensure that no insult is conveyed when this is done.

2-19. Ways to clean or sanitize the hands through the use of—

- Soap and potable water.

Note. Nonpotable water should only be used as a last resort as it may be contaminated which would decrease the positive effect of handwashing.

- Alcohol-based hand sanitizing solutions when soap and water are not available.

Note. Alcohol-based hand sanitizers are ineffective if the Soldiers hands are caked with dirt or grease.

- Alcohol wipes (included in the accessory packet of every meal, ready-to-eat, individual) to clean hands.
- Commercial cleansing wipes if available.

SHOWERING IN THE FIELD

2-20. Under optimal conditions Soldiers should have access to a shower every day, or at least once every week to maintain good personal hygiene. Frequent showering prevents skin infections and potential parasite infestations. Given mission constraints, if showers are not available, washing daily with a washcloth is advised. Particular attention should be given to sweaty areas or places that become wet—armpits, feet, genitals, between thighs and buttocks, and under breasts.

2-21. It is highly recommended that female Soldiers that are menstruating while in the field or deployed have daily access to shower facilities. This does not mean that there must be a fixed facility with hot and cold running water on site. In situations where shower facilities are not available, female Soldiers can establish a private space with adequate drainage and bathe using a washcloth and water. A full canteen of water should be adequate for one Soldier and a five-gallon water container for multiple Soldiers. Provisions for heating water would be preferred, but may not always possible. The site designated for Soldiers to wash themselves must provide privacy and security. Using a tent of some form would be ideal and should be setup with some form of improvised flooring like plywood or wooden pallets to provide adequate drainage.

2-22. Female Soldiers should not be restricted from certain duties or missions during their menstrual cycle to accommodate a shower run if a bathing area has been provided in the area of operations.

+2-23. Female Soldiers who are not menstruating should be treated like male Soldiers with regard to accessing fixed shower facilities. Shower runs should be coordinated without sex (male or female) preference influencing the frequency of the showers. Soldiers should avoid using perfume, cologne, or scented soaps, which can attract insects. However, unscented lotion should be used to keep the skin from cracking and becoming infected. Cosmetics are not authorized in the field.

KEEP SKIN DRY

2-24. Keep the skin dry as follows:

- Use foot powder on feet, especially if fungal infections have been a problem in the past.
- Use absorbent body powder in areas where wetness is a problem (such as between the thighs and, for females, under the breasts).

2-25. Wear clothing properly as follows:

- Wear loose fitting uniforms; they allow for better ventilation. Tight-fitting uniforms reduce ventilation.
- Avoid wearing nylon or silk-type undergarments in hot or humid environments.

ORAL HYGIENE

2-26. Bacteria in the mouth use starches and sugar to produce acids that cause tooth decay. Not brushing for just a few days can cause gingivitis (bleeding gums). If gum disease already exists, it can quickly worsen. To prevent tooth decay and gum disease Soldiers must employ and maintain good oral hygiene practices at all times.

Flossing

2-27. Flossing cleans the areas between the teeth and under the gums where brushing cannot reach. Floss at least once per day, before brushing to prevent tooth decay and gum disease.

Brushing

2-28. Soldiers can brush their teeth without running water and a sink. Keep a small toothbrush with a ventilated cover in a pocket. Brush at least twice a day, especially before sleeping. Apply fluoridated toothpaste to the toothbrush and brush all the surfaces of the teeth with a circular motion. Do not rinse, eat, or drink anything for at least 30 minutes after brushing. The fluoride will stay on the teeth longer and protect them better. If toothpaste is not available brush teeth anyway. Brushing should include the tongue and the roof of the mouth.

Note. After brushing pour a small amount of water over the bristles of the toothbrush to rinse them.

2-29. If a toothbrush is not available, Soldiers can rinse their mouths with water after eating then wrap a piece of cloth around a finger and wipe the surfaces of the teeth.

PHYSICAL FITNESS

2-30. Individual physical fitness plays a large part in a Soldier's ability to fight off infection and disease. It also plays a part in preventing physical injuries. Physically fit Soldiers are less likely to become sick or injured.

2-31. Once deployed, fitness activities also lower the likelihood of combat and operational stress reactions. Leaders must be aware of the morale benefits associated with physical training opportunities and should consider deploying with some unit physical fitness equipment or sports equipment. Physical training also helps Soldiers with acclimatization.

WATER- AND FOODBORNE ILLNESS

2-32. To avoid contracting water- and foodborne disease—

- Only eat and drink food and water from United States-approved sources.
- Do not buy foods, drinks, or ice from civilian vendors unless approved by veterinary personnel.
- Wash hands using soap and potable water as follows:
  - After using the latrine.
  - Before touching eating utensils or food.
  - After eating.
  - After handling any item that can potentially transfer germs.
  - Frequently during the work day to keep hands free of germs.

ARTHROPODS, RODENTS, AND OTHER ANIMAL THREATS

2-33. Of the 80 diseases said to be of military importance, over two-thirds are caused by pathogens transmitted by arthropods, rodents, and other animals. In addition to disease, these pests can inflict severe physical, psychological, and economic stresses that threaten the military mission. For example, arthropod bites can be painfully distracting and can lead to secondary infections, dermatitis, or allergic reactions. Soldiers can avoid the incidence of vectorborne diseases and the associated discomfort caused by stinging and biting arthropods by adhering to established preventive medicine measures. Other animal threats such as feral dogs, cats, snakes and the health threats associated with them are addressed in more detail in chapter six of this publication.

DEPARTMENT OF DEFENSE INSECT REPELLENT SYSTEM

2-34. When used properly, the Department of Defense Insect Repellent System will prevent disease, pain, and the annoyance caused by bites of arthropods such as mosquitoes, sand flies, ticks and chiggers. The system consists of three components—

- Permethrin on uniforms and bed nets.

Note. Current issue Army Combat Uniforms and pop-up bed nets are factory treated with the insect repellent permethrin.

- A 33 percent N, N-diethyl-meta-toluamide (DEET) insect repellent applied to exposed skin.
- Proper wearing of the uniform.

2-35. Insect repellents are one commonly used form of preventive medicine measures. They provide the commander with a quick and inexpensive measure to protect Soldiers. They can be applied effectively to prevent arthropodborne disease. Repellents are often the only means of protection against arthropodborne diseases in environments when vector control measures are not possible or when the speed of military developments prevents the use of chemoprophylaxis or vaccines.

APPLICATION OF REPELLENTS

2-36. Many of the disease-causing pathogens of military importance are carried (vectored) and transmitted by ticks, chigger mites, fleas, and body lice. All of these vectors come into close contact with Soldiers' uniforms before they bite.

2-37. Permethrin is an arthropod repellent that was fielded in 1991 and is still in use today, as the standard military clothing repellent. When applied properly and used according to the manufacturers' guidelines this product is safe and effective at preventing stinging and biting arthropods from gaining access to the Soldier's skin. Insect repellent, such as DEET, must be applied and reapplied to exposed skin based on the instructions on the product label.

TYPES OF MOSQUITO BED NETS

2-38. The mosquito bed net is a finely woven, nylon canopy that can be used with a folding cot, hammock, and issued sleeping bags and shelters. To be effective the net must be supported and the edges must be tucked in to prevent contact with the occupant's body while sleeping. This will prevent mosquitoes and other biting and stinging arthropods from biting the Soldier through the mesh. Standard issue permethrin and insecticide spray can be applied to the mesh or sprayed on the insects trapped inside the netting. Detailed instructions can be found in the Armed Forces Pest Management Board's Technical Guide 36.

2-39. Improved bed net system is a pop-up, self-supporting, low profile bed net. It is colored a coyote brown and is treated with permethrin repellent.

2-40. The bed net, pop-up, self-supporting, low profile bed net is colored a green camouflage and is treated with permethrin repellent.

2-41. The self-supporting, low profile bed net can be carried inside the backpack or between the backpack and frame. It has a built-in frame designed for single-step, pop-up assembly. Permethrin-impregnated tight

weave mesh provides increased protection against very small biting and stinging arthropods such as sand flies. The net may be used directly on the ground. Infrared signature, forest camouflage pattern, and carrying capacity are compatible with military requirements. Thus, the new bed net is less visible to the enemy, lighter in weight (two pounds), and easier to set up and take down than the older net.

IMMUNIZATIONS AND CHEMOPROPHYLAXIS

2-42. Although immunizations and chemoprophylactic measures are considered individual preventive medicine measures they are not controlled by the individual Soldier.

2-43. Vaccines are available for a few of the viral pathogens (yellow fever virus, Japanese encephalitis virus). Even when appropriate chemoprophylaxis or vaccination is available for the disease of greatest concern, their use entails considerable medical management. When risk is unknown or considered to be low, personal protection may be the appropriate strategy for prevention. Therefore, the proper use of other preventive medicine measures described earlier offer the most practical means of interrupting and preventing arthropodborne disease transmission.

2-44. In summary, there are three required components for effective personal protection—

- First, the measure itself must be effective when properly used.
- Second, the development and continual maintenance of a well-defined education program is a must.
- Third, every enlisted Soldier, every officer, and especially every commander must be informed about the importance of preventive medicine measures for reducing the occurrence of disease caused by pest/arthropodborne pathogens.

HEAT INJURY

2-45. To avoid potential heat injury—

- Soldiers must become acclimatized. Significant heat acclimatization requires at least three to five days and full acclimatization can take up to two weeks.
- Use sunscreen on all exposed body parts.
- Drink plenty of water, depending on the heat and activity level, Soldiers may need to drink from ½ to 1½ quarts of water per hour. Three gallons or 12-quarts per day in hot, dry climates. Drinking water is a must in order to prevent heat illness.
- Use work/rest cycles, as leaders direct. A rest period helps prevent dangerous increases in body temperatures by minimizing heat production.
- Eat all meals to replace salts; eating all meals in the field will usually provide the body's requirements for salts. Field rations are designed to meet the daily requirements for minerals and electrolytes (sodium).
- Modify the uniform, when directed/authorized by the commander to reduce heat stress and to protect against ultraviolet radiation.

COLD INJURY

2-46. To avoid potential cold injury—

- Wear clothing as directed by commanders and leaders.
- Wear clothing in loose layers (top and bottom). Avoid tight clothing, including tight underwear.
- Keep clothing clean and dry.
- Remove or loosen excess clothing when working or in heated areas to prevent sweating.
- Wear headgear to prevent body heat loss. The body loses large amounts of heat through the head.
- Change wet/damp clothes as soon as possible.
- Keep the body warm by continuing to move, if possible.
- Exercise large muscle groups (arms, shoulders, trunk, and legs) frequently to keep warm.

- If Soldiers must remain in a small area, exercise the toes, feet, fingers, and hands.
- Avoid the use of alcohol as it makes the body lose heat faster.
- Avoid standing directly on cold, wet ground, when possible.
- Avoid tobacco products. Using tobacco products decreases blood flow to the skin.
- Eat all meals to maintain energy.
- Drink plenty of water and/or warm nonalcoholic fluids. Dark yellow urine indicates that Soldiers are not drinking enough fluids!

Note. Soldiers can dehydrate just as easily in cold climates too.

- Buddies should monitor each other for cold-weather injury.

Note. Soldiers must not attempt to rewarm frozen body parts unless under medical supervision.

2-47. To protect the feet—
- Bring several pairs of issue boot socks. Keep socks clean and dry. Change wet or damp socks as soon as possible.
- Wash feet daily, if possible.
- Apply foot powder on feet and in boots when changing socks.
- Avoid tight-fitting socks and boots (fully lace boots up, as loose as possible).
- Wear overshoes to keep boots dry.

2-48. To protect the hands—
- Wear gloves with inserts or mittens with inserts.
- Warm hands under clothing if they become numb.
- Avoid skin contact with snow, fuel, or bare metal.
- Waterproof gloves by treating with waterproofing compounds, such as snow seal.

2-49. To protect the face and ears—
- Cover face and ears with a scarf or other material, if available.
- Wear insulated cap with flaps down or wear a balaclava and secure under chin.
- Warm face and ears by covering them with hands. Do not rub face and ears.
- Do not use face camouflage when windchill is -10 degrees Fahrenheit or below; prevents detection of cold-weather illness (frostbite).

2-50. Protect eyes by—
- Wearing sunglasses.
- Wearing issued eye protection.

2-51. Protect buddy by watching for signs of frostbite on the Soldier's exposed skin.

Note. The affected skin will appear as pale/gray/waxy areas.

TOXIC INDUSTRIAL MATERIALS

2-52. Recognize and prepare for toxic industrial material threats in the following areas:
- Occupational hazards—
  - Exhaust from engines and fuel space heaters.
  - Gases from weapons firing, such as rockets and M8 smoke.
  - Solvents used to clean weapons.
  - Greases and oil from vehicle maintenance repair.

  - Detergents used to clean equipment.
- Industrial hazards—
  - Compressed gases.
  - Industrial solvents.
  - Hazardous chemical waste.
  - Materials used at water treatment plants.
  - Materials and water used at waste sewage and water treatment plants.
- Biological/radiological hazards include—
  - Medical waste.
  - Materials used at medical research facilities.
  - Radioactive isotopes.
  - Substances at nuclear power plants.
  - Depleted uranium.
- If necessary request preventive medicine assistance in identifying sources.

2-53. Recognize the injury as follows:
- Carbon monoxide—
  - Is a colorless, odorless, and tasteless gas that causes headache, sleepiness, coma, and death.
- Smoke used for obscuration and signaling—
  - Is a very irritating gas that can cause severe coughing, wheezing, and lung damage, if inhaled.
- Bore/gun gases—
  - Is an extremely irritating gas that reacts with body fluids to produce hydrochloric acid in the throat, lungs, and eyes. It causes coughing, acid burns to tissues, and flu-like lung disease.
- Fuel, solvents, grease, and oils—
  - Cause skin rashes, burns, drying, and infections. They also cause damage to the liver, blood, and brain.

Note. Many toxic industrial materials are known carcinogens.

PROTECT SELF AND MISSION FROM TOXIC INDUSTRIAL MATERIALS

2-54. To avoid carbon monoxide poisoning—
- Run engines outdoors or with vehicle bay/shop exhaust ventilation systems as the primary system with the secondary system being shop doors and windows open.
- Keep sleeping area windows slightly open for ventilation and air movement.
- DO NOT sleep in vehicles with the engine running or use engine exhaust for heat.
- DO NOT park vehicles near air intakes to tents, trailers, or environmental control units.

2-55. To avoid inhaling bore/gun gases—
- Use onboard vehicle ventilation systems.
- Keep bore evacuator well maintained.
- Try to keep some air movement in gun emplacements.

2-56. When using solvents, grease, and oils—
- Only use authorized safety solvent.
- Never substitute an unauthorized solvent to clean equipment. For example, do not use a degreasing agent like denatured alcohol instead of an authorized nontoxic, nonhazardous solvent preservative cleaning agent.
- Wear coveralls, if available, and rubber gloves.
- Wash or change clothing often, especially when soiled by chemicals or fuel.

- Always follow label instructions for use and safety precautions.
- Use ventilation systems in areas where fumes are present or when conditions and materials dictate.

2-57. When required to handle biological waste—

- Always use disposable rubber gloves when working with biological materials.
- Wear coveralls/rubberized aprons, as necessary.
- Wear goggles or safety glasses, as necessary.
- Wear facemasks and air-filtered breathing masks approved for specific tasks, when removing/working with biological waste.
- Dispose of biological waste materials according to unit standard operating procedures and product label instructions.

NOISE HAZARDS

2-58. Protect self and mission from noise hazards by—

- Wearing properly fitted earplugs. Different types include single flange, triple flange, and hand-formed.
- Keeping earplugs and earmuffs clean to prevent ear infections.
- Avoid high intensity noise areas or limit the time spent in hazardous noise environments to perform critical tasks.

SLEEP DEPRIVATION

2-59. Sleep deprivation degrades performance and leads to errors in judgment. Quality sleep is essential to sustain performance, and performance is critical to the successful outcome of operations.

2-60. Seven to 8 hours of sleep in each 24-hour period will sustain performance indefinitely. Sleep periods do not need to be taken all at one time, they can be divided into two or more sleep periods (including naps) per 24-hour time period as long as seven or more hours of sleep is obtained.

2-61. Naps add to recuperative sleep time. A nap boosts both immediate and long-term performance. The benefits of a short nap are evident for up to two days after the nap.

2-62. Performance will be degraded with less than 8 hours of sleep every 24-hours. Less than 7 hours of sleep within every 24-hour period will result in stabilizing performance at a lower level, and less than 4 hours of sleep in every 24 hours will degrade performance continuously and rapidly with no stabilization.

2-63. To the extent possible, sleep in a quiet, undisturbed environment away from other activity and protected from *wake up and wait* intrusions. Sleeping in noisy active environments with frequent awakenings is far less restorative.

2-64. When working on limited or no sleep, caffeine in doses of 200 to 300 milligrams (the equivalent of 2 to 3 cups of coffee) every 3 to 4 hours will improve performance. Sleep, like fuel, ammunition, food, and water is necessary to sustain performance. It is a command responsibility to ensure all personnel get adequate restorative sleep.

SECTION II — COMMANDERS AND UNIT LEADERS RESPONSIBILITIES

COMMANDERS AND LEADERS

2-65. Commanders are responsible for the readiness of their command to include the medical and dental readiness of every Soldier in their charge.

2-66. Commanders and leaders at every level must remember that the most effective preventive medicine measure that they can implement is to set the example for their Soldiers. Leaders accomplish this by personally employing all of the individual preventive medicine measures discussed throughout this publication. For leaders to ensure that Soldiers are adhering to established preventive medicine measures,

they must strictly enforce unit policies regarding implementation and adherence to preventive medicine measures and standards of personal hygiene.

PLAN FOR FIELD SANITATION DEVICES

2-67. Commanders can plan for the construction and maintenance of field sanitation devices by determining the type of devices required. The most common type of human waste disposal devices in field sites are chemical toilets. When moving, individual waste collection bags are the primary type of collection device used.

2-68. When prefabricated latrine facilities are not available, the type of improvised waste disposal facilities used depends on the mission, length of stay in the area, terrain, and weather conditions. If chemical toilets are not available, the burn-out latrine is the preferred improvised waste disposal device.

2-69. Select location for field latrines as follows:

- As far from food operations as possible (100 meters or more). Downwind and downslope, if possible.
- Downslope from wells, springs, streams, and other water sources (30 meters or more).

MAINTENANCE OF FIELD LATRINES

2-70. As soon as the unit moves into a new area, Soldiers should be detailed to establish and maintain the latrines as follows:

- Instruct the field sanitation team to spray the latrines with an appropriate residual pesticide according to the label only after performing a pest/insect survey to determine that a pest problem actually exists. Do not spray the pit contents.
- Always provide handwashing facilities at the food service facilities and the latrines. Make use of handwashing devices at latrines mandatory.
- Cover, transport, burn, or bury waste daily.
- Use the field sanitation team to train Soldiers and unit leaders in preventive medicine measures to prevent food-, water-, and wasteborne diseases.

PLAN FOR PERSONAL HYGIENE

2-71. Provide shower facilities in the field. All Soldiers must shower at least once a week and have a clean change of uniform to reduce the health hazard associated with body lice and other health hazards.

2-72. Inspect Soldiers' personal equipment to ensure that—

- They have sufficient personal hygiene supplies—soap, washcloths, towels, a toothbrush, dental floss, fluoride toothpaste, and razor and razor blades (females should have sanitary napkins or tampons).
- Undergarments are cotton (not silk, nylon, or polyester).
- Uniforms fit properly.
- Soldiers have several pairs of issue boot socks; the number will depend on the type and length of the mission.
- Soldiers receive annual dental examinations and needed oral health care. Make sure all oral health appointments are kept. Use lulls in operational intensity to ensure that Soldiers maintain good oral health status.

PLAN FOR PHYSICAL TRAINING

2-73. Ensure that leaders at all levels recognize the benefits of physical fitness. Leaders must be role models, leading by example.

2-74. Take a positive approach to physical fitness with Soldiers. A physically fit Soldier is less likely to be an operational loss from disease or injury. Refer to FM 7-22 for information on physical readiness training.

PLAN FOR SAFE WATER

2-75. Commanders can plan for safe water by—

- Knowing the location of approved water distribution points.
- Making sure his unit has an adequate supply of—
  - Iodine water purification tablets (1 bottle for each individual).
  - Field chlorination kits.
  - Bulk chlorine.
  - Chlorination kits (water purification).
- Ensuring water trailers and tankers (400 gallons and above) are inspected by preventive medicine personnel semiannually.
- Inspecting water containers before use.
- Checking the residual chlorine of bulk water supplies (five-gallon cans, water pillows, water trailers) before drinking and at least daily thereafter.

PLAN FOR SAFE FOOD

2-76. Commanders can plan for safe food by ensuring that—

- Food service personnel maintain foods at safe temperatures.
- Food service personnel are inspected daily and referred for medical evaluation of those with illness and/or skin infections.
- Make sure foods, drinks, and ice purchased from civilian vendors are approved by the command medical authority.
- Supervise the use of the mess kit laundry/sanitation center.
- Food service personnel and Soldiers use handwashing devices.
- All food waste is transported to an approved disposal site, buried, or burned daily (at least 30 meters from food preparation area and water source).

PLAN FOR ARTHROPOD, RODENT, AND OTHER ANIMAL THREATS

2-77. Commanders can plan for arthropod, rodent, and other animal threats by—

- Obtaining information on biting and stinging arthropods and other animals (such as snakes, domestic and wild animals, or birds) from supporting preventive medicine personnel.
- Using his field sanitation teams to—
  - Train Soldiers in preventive medicine measures.
  - Control insects and other medically important arthropods.
  - Control rodents and other medically important animals.
  - Remind Soldiers to avoid handling insects, arthropods, snakes, and other animals to prevent bites or injury.
  - Keep Soldiers from eating in sleeping/work areas to avoid attracting insects, rodents, and other animals.
- Ensuring that—
  - Animal mascots are not kept.
  - Each Soldier has a bed net in good repair and treated with permethrin repellent.
  - Immunizations are current. Prophylaxis (for example, antimalaria tablets) is available for issue as required.
  - Laundry and shower facilities are available.
  - Field sanitation team supplies and equipment are available and replenished when necessary.
  - Assistance from a preventive medicine unit (through medical or command channels) when control of biting arthropods, rodents, or other animals is beyond the capabilities of the unit.

ENFORCE INDIVIDUAL PREVENTIVE MEDICINE MEASURES

2-78. Commanders can enforce individual preventive medicine measures by ensuring that—

- Every Soldier's uniforms are impregnated with permethrin before field training or deployment.
- Each Soldier has DEPARTMENT OF DEFENSE skin and clothing insect repellent and uses them.

Note. Food handlers must not use insect repellent on their hands when preparing and serving food or when cleaning food service equipment.

- Soldiers keep their shirts buttoned, sleeves rolled down, and pants bloused inside boots.
- Soldiers shower regularly (field expedients will do); a field shower with a clean change of uniform should be accomplished once each week to control body lice.
- The use of aftershave lotions, colognes, perfumes, and scented soaps are discontinued to prevent attraction of insects.
- Permethrin-treated bed nets and the Department of Defense-approved aerosol insecticide (Insecticide, Aerosol, d-Phenothrin, 2%) is sprayed inside the net as necessary.
- Leaders observe Soldiers taking antimalarial tablets or other prophylaxis (when directed by the commander).
- The field sanitation team inspects regularly to identify suspected lice infestations and to refer affected Soldiers for medical treatment.

MINIMIZE EXPOSURE TO ARTHROPOD, RODENT, AND ANIMAL THREATS

2-79. Commanders can minimize exposure to arthropod, rodent, and animal threats if the mission permits by—

- Using their field sanitation team to assist in selecting areas to establish base camp sites.
- Occupying areas away from insect/arthropod breeding areas such as natural bodies of water.
- Avoiding areas with high grass or dense vegetation.
- Using field sanitation team recommendations and assistance in applying pesticides for area control around living areas. Treatment of natural bodies of water is beyond the scope of the field sanitation team.
- Draining or filling in temporary standing water sites in occupied area (empty cans, used tires, or wheel ruts after rains).
- Clearing vegetation in and around occupied area.
- Maintaining area sanitation by enforcing good sanitation practices.
- Properly disposing of all waste.
- Protecting all food supplies.
- Ensuring that the company area is regularly policed.
- Removing/controlling/killing pests (feral dogs, feral cats, wild animals, snakes, rats, mice, lice, and flies).

MINIMIZE EXPOSURE TO POISONOUS PLANTS AND TOXIC FRUITS

2-80. The commander can minimize exposure to poisonous plants and toxic fruits by—

- Obtaining information on indigenous poisonous plants and toxic fruits through unit medical channels or from the commands' preventive medicine representative.
- Providing information on the kinds of poisonous plants and fruits that may be found in the unit area.
- Using the unit field sanitation teams to train Soldiers in preventive medicine measures for indigenous poisonous plants and toxic fruits.

- Having leaders monitoring and enforcing individual preventive medicine measures by ensuring that Soldiers properly wear the uniform and avoid—
  - Poisonous plants where possible.
  - Consuming potentially dangerous vegetation and fruits.
  - Putting grasses and twigs in the mouth.

PLAN FOR HOT WEATHER

2-81. The commander can plan for hot weather by—

- Maximizing physical fitness and heat acclimatization opportunities before deployment.
- Using the field sanitation teams to train individuals and their leaders in preventive medicine measures against heat.
- Acclimatizing personnel to high temperatures as gradually as the mission will allow.
- Briefing Soldiers on the danger of sunburn and skin rashes and the importance of using sunscreen and maintaining good personal hygiene.
- Obtaining weather forecast for time/area of training/mission.
- Ensuring adequate supplies of potable water are available (up to three gallons per day per Soldier just for drinking). Issue a second canteen to Soldiers in hot weather operations. In the desert, additional canteens may be required.
- Knowing the location of water distribution points.
- Setting up a buddy system to maximize rehydration and minimize heat injuries.
- Ensuring medical support is available for treatment of heat injuries.
- Placing leaders to observe for and react to heat injury during dispersed training (road marches) or real-world operations.
- Training during the cooler hours of the morning if the mission permits.
- Serving heavy meals in the evening, rather than at noon.

Obtain and Use Heat Condition Information

2-82. Commanders must obtain and use heat condition information to plan for training and conducting operations.

2-83. Leaders must obtain heat condition information per unit standard operating measures or contact the local supporting preventive medicine detachment or section. Heat condition information may be reported as—

- Category: one, two, three, four, or five.
- Wet bulb-globe temperature index.
- Use heat condition information to determine required water intake and work/rest cycles.

Note. Training by lecture or demonstration, maintenance procedures on equipment, or personal hygiene activities (such as skin and foot care) can be performed during rest periods.

Enforce Individual Preventive Medicine Measures

2-84. Commanders and leaders must enforce individual preventive medicine measures by—

- Enforcing water intake by observing Soldiers drinking required amounts. Encourage frequent drinking of water in small amounts.
- Ensuring that Soldiers practice good field hygiene.
- Providing cool water; if desired, Soldiers can add flavoring after disinfection to enhance consumption. Personnel should use their canteen cup for consumption of flavored water. DO NOT add flavoring to canteen water; use only plain water in canteen.
- Ensuring troops drink water before starting any hard work or mission (in the morning, with/after meals).

- Ensuring Soldiers use the buddy system.
- Checking Soldiers' canteens for water; not beverages.
- Making sure Soldiers have adequate time to eat and drink as mission permits. Permit personnel to consume carbohydrate/electrolyte beverages (sports drinks) as supplemental nutrients under conditions of extreme calorie and water requirements; such as extremely vigorous activities.

2-85. Reduce heat injuries by—

- Enforcing work/rest cycles when the mission permits. Permitting personnel to work/rest in the shade, if possible.
- Encouraging Soldiers to eat all meals for needed salts.
- Adjusting workload to size of individuals, when possible.
- Ensuring Soldiers have access to and use sunscreen.
- Prepare for heat casualties and decreased performance when water and work/rest cycle recommendations cannot be met.

Modify Wear of the Uniform

2-86. When the situation requires and the tactical situation permits, commanders and leaders must modify the wear of the uniform to ensure that—

- Soldier's skin is covered while in sun.
- Uniforms are worn loose at neck, wrists, and lower legs (unblouse pants based on the heat category).

Note. If the health threat from biting arthropods is high, keep sleeves rolled down and pants bloused in boots.

Identify Special Considerations

2-87. Commanders must identify special considerations. For example, they must identify and modify training/physical activity for Soldiers with high-risk conditions of heat injuries, such as—

- Diseases/injuries, especially fevers, vomiting, diarrhea, heat rash, or sunburn.
- Use of alcohol within the last 24 hours.
- Overweight/unfit.
- Over 40 years old.
- Fatigue/lack of sleep.
- Taking medication (especially for high blood pressure, colds, or diarrhea).
- Previous heat stroke/severe heat exhaustion.
- Lack of recent experience in hot environments.

PLAN FOR THE COLD

2-88. Commanders can effectively plan for the cold by—

- Using his field sanitation teams to train individuals and their leaders in preventive medicine measures against cold. Obtain weather forecast for time/area of training/mission.
- Ensuring that the following are available as the tactical situation permits—
  - Covered vehicles for troop transport.
  - Cold-weather clothing.
  - Laundry services.
- Providing—
  - Warming tents/areas.
  - Hot rations/hot beverages.
  - Plenty of fresh drinking water.

- Inspecting Soldiers (before starting training/mission) to ensure that each Soldier has—
  - Availability, proper fit, and wear of cold-weather gear.
  - Clean, dry, proper-fitting clothing.
  - Several pairs of socks, depending on the nature and duration of the mission.
- Leaders must also ensure that—
  - Soldiers pulling guard duty or other sedentary duties are rotated frequently.
  - Medical support is available for treatment should cold-weather injuries occur.

Obtain and Use Windchill Information

2-89. Commanders can obtain temperature and windchill information (as directed by unit standard operating procedures or contact the local supporting preventive medicine detachment or section) to plan for training and operations.

2-90. These guidelines are generalized for worldwide use. Commanders of units with extensive extreme cold-weather training and specialized equipment may opt to use less conservative guidelines.

Note. Any dry clothing (mittens, scarves, masks) or material which reduces wind exposure will help protect the covered skin.

2-91. Commanders must understand that—

- Cold injuries can and do occur in nonfreezing temperatures. Hypothermia can occur in mildly cool weather.
- Immersion syndrome (trench foot) injuries can occur at any point on the windchill chart and—
  - Are much more likely to occur than frostbite at *LITTLE DANGER* windchill temperatures, especially on extended exercises/missions and/or in wet environments.
  - Can lead to permanent disability, just like frostbite.

Identify Special Considerations

2-92. Commanders must identify special conditions that place Soldiers at high risk of cold injuries. These special considerations include—

- Previous trench foot or frostbite.
- Fatigue.
- Use of alcohol.
- Significant injuries.
- Poor nutrition.
- Use of medications that cause drowsiness.
- Little previous experience in cold weather.
- Immobilized or subject to greatly reduced activity.
- Soldiers wearing wet clothing.
- Sleep deprivation.

Identify the Special Hazards of Carbon Monoxide Poisoning and Fire

2-93. Commanders must identify the special hazards of carbon monoxide poisoning and fire that may affect cold-weather operations and enforce preventive medicine measures to prevent carbon monoxide poisoning.

Enforce Individual Preventive Medicine Measures

2-94. Leaders must enforce individual preventive medicine measures which include Soldiers—

- Wearing clean and dry uniforms in loose layers.
- Removing outer layer(s) before starting hard work or when in heated areas (before sweating).

- Inspecting their socks and feet at least daily when operating in cold and/or wet environments.
- Washing their feet daily.
- Wearing clean and dry socks.
- Using warming areas when available.
- Eating all meals to ensure sufficient calories are consumed to maintain body heat.
- Drinking plenty of water and/or nonalcoholic fluids. In cold weather, fluid intake is often neglected, leading to dehydration.
- Exercising their large muscle groups or at least their toes, feet, fingers, and hands to keep warm.
- Instituting the buddy system in cold-weather operations. Soldiers taking care of each other decrease cold injuries.

PLAN FOR TOXIC INDUSTRIAL MATERIALS

2-95. Commanders must identify sources of toxic industrial materials that may be encountered in their unit area of operations. It may be necessary to request preventive medicine assistance in identifying sources. Identify sources as follows:

- Obtain safer chemicals for unit operations, if available.
- Observe cautions/warnings posted in technical manuals dealing with solvents, corrosives, and other hazardous materials. Refer to the safety data sheets that accompany toxic materials.

ENFORCE INDIVIDUAL PREVENTIVE MEDICINE MEASURES

2-96. Ensure that Soldiers—

- Repair engines outside or vent engine exhaust to outside.
- Keep their sleeping quarters ventilated.
- Do not use vehicle engines as heaters.
- Use/maintain onboard ventilation systems.
- Are trained and drilled to protect themselves around hydrogen chloride and M8 smoke.
- Maintain bore/gun gas evacuation systems.
- Use approved *safety* solvent.
- Have adequate clean gloves, coveralls, and other protective gear.
- Follow label instructions on chemical containers.

PLAN FOR NOISE

2-97. Identify existing noise hazards in the unit area. If necessary, request preventive medicine assistance in identifying sources. Identify hazards as follows:

- Ensure that hearing conservation is part of the unit standard operating procedures.
- Ensure all Soldiers are medically fitted for hearing protectors and are issued multiple sets.
- Ensure all Soldiers have annual hearing test/screening.
- Control noise sources.
- Isolate by distance; that is, keep troops away from noise, if possible.
- Isolate by barrier; for example, use sandbags.
- Use organic equipment controls; for example, keep mufflers and engine covers in good repair.
- Train Soldiers to accomplish their mission while wearing hearing protectors.
- Post noise-hazard signs in noise-hazardous areas and on noise-hazardous equipment.

ENFORCE INDIVIDUAL PROTECTIVE MEASURES

2-98. Ensure that Soldiers—

- Wear earplugs or other hearing protective devices.
- Do not remove inserts from aircraft or tracked vehicle helmets.

- Avoid unnecessary exposure.
- Limit necessary exposure to short, infrequent, mission-essential times.
- Clean their hearing protectors.

PLAN FOR AND ENFORCE SLEEP DISCIPLINE

2-99. Sleep is a biological need, critical for sustaining the mental abilities needed for success on the battlefield. Soldiers require 7 to 8 hours of good quality sleep every 24-hour period to sustain operational readiness. Soldiers who lose sleep will accumulate a sleep debt over time that will seriously impair their performance. The only way to pay off this debt is by obtaining the needed sleep. The demanding nature of military operations often creates situations where obtaining sleep may be difficult or even impossible for more than short periods. While essential for many aspects of operational success, sheer determination or willpower cannot offset the mounting effects of inadequate sleep. This concept is applicable for all levels of military operations including basic training and in all operational environments. For this reason, sleep should be viewed as being as critical as any logistical item of resupply, like water, food, fuel, and ammunition. Commanders need to plan proactively for the allocation of adequate sleep for themselves and their subordinates.

2-100. Ways to overcome performance degradation include—

- Upon signs of diminished performance, find time for Soldiers to nap, change routines, or rotate jobs (if cross-trained).
- Have those Soldiers most affected by sleep loss execute a self-paced task.
- Have the Soldiers to execute a task as a team, using the buddy system.
- Do not allow Soldiers to be awakened for meals while in flight to a new location, especially if the time zone of the destination is several hours different than that of point of departure.
- Insist that Soldiers empty their bladder before going to bed. Awakening to urinate interrupts sleep and getting in and out of bed may disturb others and interrupt their sleep.
- Allocate sleep by priority. Leaders, on whose decisions mission success and unit survival depend, must get the highest priority and largest allocation of sleep. Second priority is given to Soldiers that have guard duty and to those whose jobs require them to perform calculations, make judgments, sustain attention, evaluate information, and perform tasks that require a degree of precision and alertness.

ENSURE WELFARE, SAFETY, AND HEALTH OF THE UNIT

2-101. Commanders can ensure the welfare, safety, and health of their Soldiers by—

- Ensuring that the best and safest water, food, equipment, shelter, sanitation, and sleep possible are provided.
- Educating Soldiers to maintain professional pride and personal caring for themselves, each other, and their equipment.
- Knowing the personal backgrounds and the military skills of your Soldiers. Chat with them informally about themselves. Be attentive and understanding while listening to Soldiers.
- Utilizing group support and counseling for Soldiers who may have problems at home.
- Assigning jobs to maintain a balance between having qualified Soldiers in key positions while sharing the load, hardship, and risks fairly.
- Using challenging and difficult environments during training to increase the unit's coping skills and confidence.

Reduce Uncertainty

2-102. Commanders can reduce uncertainty by—

- Briefing unit personnel on the situation, objectives, and conditions that the mission or environment may involve.
- Explaining reasons for hardships, delays, and changes.
- Preparing Soldiers for the worst and putting unexpected challenges or reversals in a positive perspective.
- Dealing with rumors firmly and honestly and preventing the spread of rumors.
- Making contingency plans and following standard operating procedures to reduce the effects of surprise.

Promote Unit Cohesion

2-103. Commanders can promote unit cohesion by—

- Using equipment drills, physical fitness training, team sports, and field stress training to stimulate mutual reliance and closeness.
- Bringing unit members together for meals, award ceremonies, and other special occasions.
- Integrating new members by assigning sponsors and ensuring rapid familiarization.

Impart Unit Pride

2-104. Commanders can impart unit cohesion by—

- Educating Soldiers in the history and tradition of the small unit, its parent units, and the branch of Service.
- Honoring the historical examples of initiative, endurance, and resilience, of overcoming heavy odds, and of self-sacrifice.

This page intentionally left blank.

Chapter 3

Unit Water Supply

SECTION I — MAINTAINING UNIT WATER SUPPLY

IMPORTANCE OF WATER

3-1. Water is probably the most important item of supply to a military force. An adequate supply of water is essential to the success of military operations. During times of extreme heat, lack of water can make a Soldier ineffective in a very short period of time.

3-2. The amount of water necessary to sustain Soldiers varies based on the—

- Season of the year.
- Geographical location.
- Tactical situation.

3-3. These factors must be taken into consideration when estimating minimum water requirements. For example, a Soldier performing normal duties in a hot and dry climate may require as much as two to six gallons of water per day for drinking purposes. In a cooler climate the Soldier may require only one-half to one gallon of water per day for the same level of exertion. The amount of water required for cooking and personal hygiene uses also varies. A guide for planning to meet water requirements in a temperate climate is five gallons per man per day for drinking and cooking. If showering facilities are to be made available, the amount required will be at least 15 gallons per man per day.

PREVENTION OF WATERBORNE DISEASE

3-4. Contaminated water has the potential to render entire units incapable of conducting successful operations. Prevention of waterborne disease is essential to maintaining a healthy and fit force. Unit field sanitation teams are responsible for ensuring that unit bulk water supplies are thoroughly disinfected to eliminate the pathogens which are responsible for the spread of waterborne disease and maintaining appropriate chlorine residuals to ensure that the water remains pathogen-free. They accomplish this task by employing field water disinfectants provided in the field sanitation teams equipment sets; issuing individual water disinfectants; conducting inspections; and enforcing simple rules of water discipline. The rules of water discipline are—

- Drink water from approved sources only.
- Prevent water waste.
- Protect water sources with good sanitary practices.

RESPONSIBILITIES OF THE UNIT FIELD SANITATION TEAMS

3-5. Unit field sanitation teams are responsible for ensuring that unit bulk water supplies are always safe for consumption. They accomplish this by ensuring that—

- Chlorine residuals in unit water supplies are checked by members of the unit's field sanitation teams a minimum of twice a day and when—
  - Water trailers and cans are filled or refilled at water distribution points.
  - Water cans and trailers arrive in the unit area.
  - Directed to do so.

- Additional chlorine is added to unit water supplies—
  - To maintain a minimum of one part per million or 0.1 milligrams per liter free available chlorine at point of consumption.
  - When directed.
- Unit-level water storage equipment is functional and maintained in a clean and sanitary condition—
  - Quarterly while in garrison.
  - Prior to every deployment.
  - Before being filled/refilled at water distribution points.
- The unit has adequate stocks of iodine tablets, chlorination kits (water purification), bulk chlorination equipment, and other supplies necessary to provide and maintain potable water in the field.
- Water trailers and bulk water containers are placed (when feasible) in such a manner as to protect them from high temperature extremes, to keep drinking water as cool as possible for palatability. Ensure that if a small mobile water chiller is being used in conjunction with the M149A 400 gallon water trailer that it is functioning properly in order to keep water cool.
- Individual Soldiers are trained to perform sanitary control measures for individual and unit bulk water supplies.
- Company dining facility sanitation, field waste disposal, and personal hygiene inspections are conducted to prevent the spread of waterborne disease.
- Preventive medicine assistance is requested to correct or control field water problems that are beyond the capabilities of unit field sanitation teams.
- Water points are established in a manner that prevents pooling of water at fill points.

FIELD WATER TERMS AND CONCEPTS

3-6. The following field water-related terms, definitions, and key concepts provide information needed to understand the context of discussions presented throughout this chapter.

Potable Water

3-7. Potable water is water from a source that has been treated and approved by preventive medicine personnel to meet the short-term potability or long-term potability standards, and is therefore considered safest to drink for the period that the standards apply. Potable water may or may not be palatable.

Nonpotable Water

3-8. Nonpotable water is water from an untreated source or treated source (including bottled water) that is not safe to drink. In the operational environment, water from any source that has not been tested and determined to be safe by preventive medicine personnel or another local medical authority for use as drinking water is considered nonpotable.

Palatable Water

3-9. Palatable water is cool, aerated, significantly free from color, turbidity, taste, and odor, and is generally pleasing to the senses. Palatable water is not necessarily potable and may contain disease or illness-causing substances.

Water Treatment and Purification

3-10. Water treatment and purification is the combination of one or more processes employed to improve the quality of water. Treatment involves removing suspended and dissolved contaminants and killing or inactivating microorganisms, usually with the goal of making the water potable and palatable. Typical water treatment processes include, but are not limited to, screening, aeration, chemical addition, coagulation, flocculation, sedimentation, filtration, reverse osmosis, ion exchange, sorption processes, and disinfection.

Disinfection

3-11. Disinfection is a water treatment process in which pathogenic (disease-producing) organisms are destroyed or otherwise inactivated. Common methods of disinfecting drinking water include boiling, ultraviolet radiation, and various procedures using chlorine, chlorine dioxide, iodine, or ozone. The preferred field method of water disinfection in the United States Army is chlorination which can be accomplished using chlorine compounds such as calcium hypochlorite (granular) and sodium hypochlorite (liquid bleach).

3-12. Disinfection is usually the last process and final treatment barrier to microbiological contaminants in water treatment systems. Disinfection involves exposing the water to an oxidant for a specific period of time to kill or inactivate pathogenic microorganisms that were not removed by the preceding treatment processes. The disinfectant may also oxidize certain chemical contaminants that passed through the previous treatment steps. A secondary purpose for disinfecting military drinking water is to provide a measurable disinfectant residual in storage and distribution systems as a sentinel to post-treatment contamination and to prevent or minimize biofilm growth.

SECTION II — SOURCES OF WATER IN THE FIELD

SOURCES OF WATER

3-13. There are essentially two sources of water found in the field—

- Raw water sources include either fresh or seawater that have not been previously used, treated, or purified.
- Other water sources approved for use by preventive medicine personnel. In many modern military operations, locally produced bottled water may be readily available. It likewise must be approved by veterinary services personnel to be sure it is safe to drink.

RAW WATER SOURCES

3-14. Raw water sources include surface water (rivers, streams, ponds, lakes, rain, ice, snow, seas, and oceans), ground water (wells or springs), and in some cases municipal water treatment systems located in the deployment area.

Surface Water

3-15. Surface water sources that the United States military water treatment equipment can treat include rivers, streams, lakes, ponds, seas, and oceans. These sources are usually more readily available than other sources, and are generally capable of supplying adequate quantities of water for all purposes. However, such sources may contain pathogenic microorganisms and may be contaminated with chemicals or radioactive substances. A few common sources of those kinds of contaminants include urban and agricultural runoff, industrial waste discharges, landfill leachates, septic tank effluents, and raw and treated sewage outfalls. When drawing water from a surface-water source, the intakes should be screened and carefully positioned in the body of water to avoid areas of likely contamination.

Ground Water

3-16. Ground water sources in the field include existing wells and springs and wells constructed by military engineers or local contractors. Some ground water sources may be used for drinking without additional treatment after the water quality has been confirmed by preventive medicine personnel and it has been disinfected (two milligrams per liter free available chlorine after 30-minutes contact time). Ground water flow generally follows local topography; therefore, latrines, septic tanks, and maintenance areas should be positioned at least 30 meters down gradient from any ground water sources used to produce drinking water. Drainage from these facilities should flow away from any water sources to prevent contamination.

Host Nation Municipal Water Systems

3-17. Partially or completely intact host nation municipal water systems are sometimes available for use as water sources during deployments. Despite the ease of access and possible presumption that the water in these systems has been treated and is potable, the water in them is by military doctrine considered nonpotable until preventive medicine personnel have inspected the systems, tested the water, and approved it for use. These types of water sources may appear appealing to use without providing additional treatment. However, the local water treatment methods may be less than adequate, inconsistent, and unreliable and the water may be contaminated after it has been treated through broken waterlines or cross-connections in the storage and distribution systems that are not readily visible. Even if the local population appears healthy, they may have developed resistance to microbiological contaminants and tolerances for chemical impurities in their water through long periods of exposure. The same contaminants could cause acute adverse health effects in unacclimated personnel, which would reduce unit readiness and could have adverse long-term health effects. Further, the threat of intentional contamination of the local drinking water system by disgruntled individuals or terrorist groups must be considered. It is important to note that most military water treatment systems employ reverse osmosis membranes that are sensitive to chlorine, so if chorine-containing municipal water is to be treated with one of those systems, the water needs to be dechlorinated prior to treating it to avoid damaging membranes.

ADDITIONAL APPROVED SOURCES OF POTABLE WATER

3-18. Additional sources of potable water include commercially bottled water and packaged field water that are approved for use by veterinary service personnel.

Commercial Bottled Water

3-19. Commercial bottled water is drinking water that is sealed in bottles, packages, or other containers by commercial (nonmilitary) interests. It may or may not have been treated prior to bottling, but should have been tested and determined to be potable. United States Army veterinary services personnel approve commercial bottled water for use by military personnel in the continental United States and outside the continental United States. They inspect the bottling facilities and test the water to ensure that it is in compliance with the acceptable manufacturing practices and sanitation standards.

3-20. Logistics personnel ensure that sources of commercial bottled water distributed in the field are approved by veterinary services personnel. Preventive medicine personnel verify that sources are approved, test and monitor bottled water stored at depots and distribution points, and encourage proper storage and product rotation. If necessary, preventive medicine personnel can extend the expiration dates of bottled water lots in 30-day increments after they have tested it to ensure it is still potable.

Packaged Field Water

3-21. Packaged field water is potable water that is produced and packaged in sealed containers by military water treatment personnel in the field. It may be issued to deployed units and personnel in plastic bags or bottles. The requirements for treatment, disinfection, and preventive medicine monitoring associated with field water supplies also apply to packaged water operations. Veterinary services personnel have the responsibility to evaluate, test, and approve military services water bottling equipment, systems, and processes, and preventive medicine has the responsibility for medical surveillance of the quality of water as it is produced and after it is in bottles and packages in bulk storage.

APPROVED USES OF POTABLE AND NONPOTABLE WATER

3-22. Potable water should be used for nearly all military water-requiring activities if it is available. From a military health perspective, potable water must be used for all activities in which there is a significant risk to the Soldier' well-being from doing otherwise. These include drinking, cooking, brushing teeth, shaving, and making ice that contacts food. Potable water should also be used for showering because of exposure to

cuts and scratches, incidental ingestion, and breathing of volatile or aerosolized material, all of which may allow contaminant entrance to the body. However, in situations where the potable water supply is insufficient to meet all water requirements and an appropriate health risk assessment is performed and approved by the commander, disinfected water of less than drinking-water quality may be used for purposes other than drinking.

3-23. Table 3-1 lists activities that require potable water and those that can be performed adequately using water of lesser quality. Note that brackish and seawater should be used only as last resorts, since their high salt content can cause corrosion of mechanical and electrical components, as well as have adverse effects on other materials.

Table 3-1. Approved potable and nonpotable water uses

Water class/quality	*Acceptable activities*
Class I – Potable. a. Reverse osmosis water purification unit treated water. b. Bottled water. c. Packaged field water. d. Approved municipal water. e. Approved ground water.	a. Drinking water. b. Brushing teeth. c. Showers and personal sanitation[1]. d. Dining facility operations. e. Ice production for food preservation and cooling. f. Medical treatment. g. Potable water hose and pipeline testing and flushing.
Class II[2] . a. Disinfected[3] filtered[4] fresh water. b. Disinfected[3] fresh water. c. Treated shower and laundry water[5].	a. Decontamination of personnel[1]. b. Retrograde cargo washing[1]. c. Heat casualty body cooling[1]. d. Mortuary affairs personnel sanitation. e. Well development.
Class III – Not Potable. a. Untreated fresh water.	a. Vehicle coolant. b. Aircraft washing. c. Pest control. d. Field laundry. e. Concrete construction. f. Well drilling.
Class IV[6] ***– Not Potable.*** a. Brackish water. b. Seawater.	a. Vehicle washing. b. Electrical grounding. c. Fire fighting. d. Chemical, biological, radiological, and nuclear decontamination of materiel. e. Dust control[7].

Notes:

[1]Permission to use other than potable water for these activities requires a risk assessment by preventive medicine assets and approval by the commander.

[2] For some surface and ground water sources, Class II a and II b waters may meet short- and/or long-term potability standards, and may be used for drinking water, with preventive medicine and command approval. Such use would require two milligrams per liter free available chlorine residual after a 30-minute contact time prior to distribution.

[3]For nonpotable water, disinfected means having at least a 1 milligram per liter free available chlorine residual after a 30-minute contact time and at the time of use.

[4]Fresh water that has been filtered through multimedia filters, microfilters, or ultrafilters, and possibly reverse osmosis concentrate water from fresh water treatment operations, depending on its quality, may be disinfected and used in lieu of or in preference to disinfected fresh water, with preventive medicine and command approval.

[5]Applies to Force Provider operations only, and has specific treatment and operational monitoring requirements specified in TB MED 577/NAVMED P-5010/AFMAN 48-138_IP.

[6]Brackish and seawater are minimally acceptable and may lead to significant corrosion if used; therefore, fresh water should be used if possible. Reverse osmosis water purification unit brine from seawater desalination operations may not be used.

[7]Use of nondisinfected water or any kind of wastewater, treated or not, for dust suppression requires the approval of the area medical authority, and is dependent on the quality of the water and on the potential it poses for human contact with pathogenic microorganisms.

Source: Table adapted from Technical Bulletin Medical 577/NAVMED P-5010-10/AFMAN 48-138_IP, page 28, Table 2-12.

SECTION III — WATERBORNE PATHOGENS

COMMONLY ENCOUNTERED WATERBORNE PATHOGENS

3-24. The information contained in this section provides information about waterborne pathogens which may be present in a unit's drinking water (due to inadequate water treatment procedures or poor sanitation conditions) and the illnesses they cause. Most agent-specific waterborne diseases discussed are considered reportable. Many of the organisms are carried in the feces of warm blooded animals, and may be present in untreated water sources, especially surface water sources. Individual pathogens are difficult to detect in water samples and there are no field tests that unit field sanitation teams can perform to determine the presence of or measure the concentration of any infectious organisms. It is for this reason that the effectiveness and reliability of water treatment and disinfection operations of a unit's water supply is so important. This is especially true in developing countries where there is a high level of acquired immunity, and concentrations of pathogenic organisms are likely to be higher. With proper water treatment and disinfection, along with frequent monitoring by unit field sanitation teams, a reasonably safe water supply can be provided to Soldiers in the field.

3-25. Pathogens are biological agents that cause disease or illness to its host. Waterborne pathogens can cause diseases that constitute a serious health threat to Soldiers in the field. They are significant in military environments where their effects can cause mission failure. It is for these reasons that all water must be properly treated to avoid disease outbreaks among Soldiers in the field.

3-26. The pathogens most commonly associated with waterborne disease are bacteria, protozoa, and viruses. This section is not intended to be a definitive discussion of all the pathogens that may be encountered, but rather a primer regarding those most commonly encountered by Soldiers in the field.

Note. Many of the pathogens found in water can also be found in foods that are contaminated through improper handling, preparation, or transport.

BACTERIAL INFECTIONS

3-27. Bacteria are microscopic life forms. They are single-celled, often parasitic microorganisms without distinct nuclei or organized cell structures. Various species are responsible for decay, fermentation, nitrogen fixation, and many plant and animal diseases.

CAMPYLOBACTERIOSIS

3-28. Campylobacteriosis is an infectious disease of the gastrointestinal tract that is caused by the pathogen *Campylobacter*. Campylobacteriosis causes fever, abdominal cramps, nausea, vomiting, and diarrhea that is often bloody and typically lasts one week. The pathogen *Campylobacter* is widely distributed and is generally regarded as the most common cause of gastroenteritis in the world, and is a common cause of travelers' diarrhea.

3-29. The primary reservoirs are wild and domestic animals, particularly birds. Illness usually occurs two to five days after exposure, but onset can range from one to ten days. Transmission through contaminated water or ice is a recognized source of infection, as well as ingestion of contaminated food and contact with infected animals, particularly cats and dogs. Generally, cases tend to occur sporadically rather than in outbreaks. All age groups are at risk, but infants and young adults are at higher risk of infection. Immune-compromised individuals that contract Campylobacteriosis are at risk of developing sepsis. In some cases, infection leads to Guillain-Barré Syndrome, which is a temporary paralysis typically requiring intensive care. On average, there are approximately 100 fatalities in the United States resulting from *Campylobacter* infections each year.

TRAVELERS' DIARRHEA

3-30. Most cases of diarrhea worldwide are caused by *Campylobacter*, certain strains of *E. coli*, and some *Noncholera Vibrio*. These bacteria are often involved in cases of waterborne diarrhea as well. These bacteria may be spread by food or other routes as well as by water. The acute onsets of nausea, fever, vomiting, abdominal pain, and diarrhea occurs after an incubation period of about two to five days. The acute illness is usually limited to three to five days or less.

CHOLERA

3-31. Cholera is an infectious disease of the gastrointestinal tract that is caused by an enterotoxin produced by the bacillus *Vibrio cholerae*. Although mild cases exhibiting diarrhea are common, acute cases can result in death within a few hours after onset if left untreated. This intestinal disease is abrupt and produces—

- Profuse watery stools without straining.
- Tenesmus or the feeling that one needs to pass stools, even though their bowels are already empty. It may involve straining, pain, and cramping.
- Prominent abdominal pain, rapidly followed or sometimes preceded by vomiting.
- Severe dehydration in a matter of a few hours that can cause circulatory collapse.

3-32. Cholera occurs mainly in Asia, Africa, Latin America, and parts of the Mediterranean, but it also presents some risk worldwide largely to those living in poverty. Humans are the main reservoirs for *Vibrio cholera.* The disease is transmitted primarily by ingesting contaminated food or water. Large outbreaks have occurred from fecal contamination of water supplies and street vendor-supplied food. Eating naturally contaminated, undercooked shellfish has also transmitted cholera. The incubation period can be from a few hours to five days, but is usually two to three days. The contagious period continues until a few days after recovery, though a carrier state may persist for several months. Susceptibility is variable and, in endemic areas, most Soldiers acquire strain-specific antibodies by early adulthood.

ESCHERICHIA COLI (E. COLI)

3-33. Individuals infected with *Escherichia coli* bacteria exhibit acute bloody diarrhea and abdominal cramping lasting about one week. The incubation period ranges from two to eight days. Little is known about susceptibility and immunity. *Escherichia coli* are transmitted via ingestion of contaminated food (especially ground beef), water, swimming in contaminated water, and person-to-person transmission. It is a recognized disease in North America, Europe, South Africa, Japan, the southern cone of South America, and Australia along with various other enterohemorrhagic *Escherichia coli* serotypes. Its importance is not well recognized in the rest of the world.

LEGIONNAIRES' DISEASE

3-34. Legionnaires' disease is a severe form of pneumonia or lung inflammation caused by a bacterium known as *Legionella*. Symptoms of the illness include fever, chills, cough, muscle aches, and headache that can be very severe. *Legionella* bacteria also cause Pontiac fever which is a milder illness resembling the flu. Separately or together, the two illnesses are sometimes called legionellosis. Pontiac fever usually clears up on its own, but untreated Legionnaires' disease can be fatal. The incubation period for Legionnaires' disease is usually two to ten days, and as little as several hours to two days for Pontiac fever. *Legionella* is transmitted via inhalation of contaminated aerosol (as from showers and faucets) or aspiration of contaminated water. *Legionella* bacteria thrive in water temperatures between 32 degrees Celsius and 45 degrees Celsius, so they can commonly be found in significant numbers in hot water systems that maintain tap temperatures below 50 degrees Celsius or hot water tanks with temperatures set below 60 degrees Celsius. Although persons of any age can contract Legionnaires' disease, those most at risk are middle-aged or elderly individuals, smokers, individuals with chronic lung disease, and immune-compromised persons. Pontiac fever can affect any individuals. Legionellosis occurs worldwide.

LEPTOSPIROSIS

3-35. Leptospirosis is a bacterial disease contracted through skin contact with surface water contaminated with urine from infected animals. *Leptospira* penetrate the skin readily through abrasions or mucus membranes. The disease is characterized by the rapid onset of fever, headache, chills, severe muscular pain in the calves and thighs, and swelling of the conjunctiva. Leptospirosis occurs worldwide in urban, rural, industrialized, and developing areas. Individuals exposed to river, canal, stream, and lake water contaminated with domestic and wild animal urine, as well as tissues and urine of infected animals are at greatest risk. Wild and domestic animals are reservoirs, particularly rats, swine, cattle, dogs, and raccoons. The primary mode of transmission is dermal exposure, especially through abraded skin. To a lesser extent, contaminated food or inhalation of contaminated aerosols can spread Leptospirosis. The incubation period is 4 to 19 days, most commonly 10 days. Infected persons may excrete *Leptospira* in the urine for 1 to 11 months after the acute illness.

METABOLITES OF *CYANOBACTERIA*

3-36. Metabolites of *cyanobacteria* are the products of *cyanobacteria* metabolism which include neurotoxins and hepatotoxins. *Cyanobacteria* or blue-green algae are found worldwide in polluted and stagnant surface waters, sediments, and soil. *Cyanobacteria* blooms can cause illness with symptoms which may include abdominal pain, nausea, vomiting, diarrhea, fever, muscle, and joint pain. The primary mode of transmission is ingestion of contaminated water, but contact with the skin may produce irritation that eventually produces a rash. Drinking water standards have not been established for most of the toxic substances associated with *Cyanobacteria* in algal blooms however, the World Health Organization has set a drinking water standard of 1.0 micrograms per deciliter total microcystins for lifetime exposure. The use of an algaecide to obtain drinking water is not advisable because killing the algae releases toxins. The chemical nature of these contaminants makes chlorination ineffective but, reverse osmosis treatment is effective at removing tastes, odors, and health-risk contaminants associated with algae.

SALMONELLOSIS

3-37. Salmonellosis is a bacterial disease caused by *Enterobacteriaceae* of the genus *Salmonella*. The incubation period is usually six to 72 hours and typically lasts 12 to 36 hours. Symptoms include fever, abdominal cramps, and diarrhea that may be bloody; the illness generally lasts four to seven days. In some cases, the diarrhea may become so severe that the infection progresses to sepsis (that is, it passes to the bloodstream) which could lead to death if not treated. Although any person is potentially at risk of contracting salmonellosis, the immune compromised, as well as infants and the elderly, are at greater risk of severe disease. Salmonellosis occurs worldwide but is reported more in North America and Europe most likely due to better reporting systems in those areas. The majority of Salmonella cases in the United States are caused by two serotypes: *S. typhimurium* and *S. enteriditis*. Domestic and wild animals are reservoirs as well as humans. Transmission routes are contaminated food, water, and contact with infected animals.

TYPHOID

3-38. Typhoid is a disease caused by the bacillus *Salmonella typhi* and occurs worldwide at a rate of 21 million cases and 200,000 deaths annually, but is not common in industrialized countries. It is characterized by sustained fever, headache, malaise, anorexia, enlargement of the spleen, a nonproductive cough, constipation, and involvement of lymphoid tissues. The period of incubation usually lasts one to three weeks. Infectivity continues from the first week through convalescence. Susceptibility is general. Humans are the primary reservoirs for *Salmonella typhi*. Transmission of the illness occurs from ingesting contaminated food or water. People living in poverty and unsanitary conditions in developing countries are at greatest risk of contracting typhoid fever.

SHIGELLOSIS

3-39. Shigellosis is also known as bacillary dysentery. Shigellosis is an infection of the distal small intestine and colon. It is characterized by diarrhea accompanied by fever, nausea, and sometimes vomiting. Humans are the principal reservoir for the disease. The severity of the illness is a function of the patient's

age and state of nutrition, the size of the infecting dose, and the serotype of the organism. Shigellosis is endemic in both tropical and temperate climates. It is found worldwide, and outbreaks tend to occur in poor areas where basic sanitation is lacking. The disease is spread through direct and indirect human contact via the fecal-oral route, ingestion of contaminated food or water, and transference of *Shigella* from feces to food surfaces by flies. The infectious dose is 10 to 100 bacteria and the incubation time is one to seven days. People that have been infected can continue to spread the disease until *Shigella* is no longer present in their feces (usually within four weeks of the onset of the illness).

PROTOZOAN INFECTIONS

3-40. A protozoan infection is a condition which is characterized by an infection caused by protozoans.

AMEBIASIS

3-41. Amebiasis is a parasitic infection of the gastrointestinal tract that is caused by the protozoal organism *Entamoeba histolytica*. Although most cases are symptom-free, acute cases exhibit fever, chills, and bloody diarrhea. Approximately 50 million cases of invasive *Entamoeba histolytica* disease occur annually, resulting in up to 100,000 deaths, with expression of disease varying with geographic location. The incubation period is commonly two to four weeks but can range from several days to 120 days. Infectivity continues through the period of cyst passing which may last several years. Cysts may remain viable for weeks or months in an approximately moist environment outside the body. The cysts may survive for as long as 48 hours at 20 degrees Celsius to 25 degrees Celsius on foods and have been found to remain viable in sewage and natural surface water at 4 degrees Celsius for one month. The primary reservoirs for *Entamoeba histolytica* are humans. Transmission is through the fecal-oral route, person-to-person transmission, or through ingestion of contaminated food or water. Additionally, flies can spread cysts.

CRYPTOSPORIDIOSIS

3-42. Cryptosporidiosis is an infectious disease of the gastrointestinal tract that is caused by the *Cryptosporidium parvum oocyst*. Symptoms include diarrhea which may be profuse and watery and associated cramping and abdominal pain. General malaise, fever, nausea, and vomiting occur less often. Immune-compromised individuals are at greater risk of contracting cryptosporidiosis and are more likely to develop severe, life-threatening symptoms.

3-43. The disease is most often transmitted through the feces of a number of carrier organisms such as cattle, other domestic animals, and humans. The occurrence is worldwide with higher rates of infection occurring in underdeveloped countries. *Cryptosporidium* is everywhere and all surface water supplies are considered to be contaminated with the parasite. The incubation period is not precisely known, but 1 to 12 days is the likely range with an average of about 7 days. Soldiers with intact immune system functions may have asymptomatic or self-limited infections. Individuals with impaired immunity generally clear their infections when the causes of immune suppression are removed.

GIARDIASIS

3-44. Giardiasis is a protozoan infection that generally affects the upper small intestine. *Giardia* cysts can be passed by wild animals such as beavers; thus, apparently pristine waters could be unsafe to drink without disinfection. They can be found in any locale, even arctic waters. As with amebiasis, most cases are asymptomatic. Ingestion of only one cyst may be enough to cause illness. A distinguishing feature after an incubation period of 7 to 21 days, acute cases may present with abdominal cramps, flatulence, diarrhea, and fatigue. If untreated, passage of cysts may continue for three months or longer. The reservoirs for *Giardia* include humans and domestic and wild animals. *Giardia* is transmitted via the fecal-oral route, especially ingestion of fecal contaminated food or water, person-to-person transmission by way of institutional environments (for example, daycare centers), and sexual activity. The cysts may also be transmitted to humans from animals.

SCHISTOSOMIASIS

3-45. Schistosomiasis is a disease that is contracted simply by being in contact with water containing *schistosomes*. Three blood flukes are the major species that cause human disease. Each has a specific geographic distribution and affects approximately 200 million people worldwide. Two major factors are responsible for the occurrence of schistosomiasis in specific geographic areas—

- The presence of the specific snail intermediate host.
- A lack of sanitary disposal of human feces.

3-46. Symptoms of Schistosomiasis include diarrhea, abdominal pain, enlarged liver, painful urination, and changes in urinary frequency. The incubation period lasts four to six weeks after infection. The period of infectivity lasts as long as the person discharges eggs in feces or urine (up to 10 years or longer). Susceptibility is general.

SCHISTOSOME DERMATITIS

3-47. *Schistosome* dermatitis is also a form of Schistosomiasis known as swimmers itch. *Schistosome* dermatitis is caused by the larvae of certain *schistosomes* of birds or mammals that may penetrate human skin and cause dermatitis. These organisms do not enter the blood stream or cause other systemic effects. Such infections may occur among bathers in lakes in many parts of the world including the Great Lakes region of North America and certain coastal beaches. The larvae are found worldwide and the disease has been reported in many European and American locations.

VIRAL INFECTION

3-48. A viral infection is caused by a virus and is often the cause of minor illness, such as a cold or the stomach flu. A viral infection usually causes many different symptoms that often come on quickly (over hours to a day or two) without prior illness. Viral infections that cause minor illnesses are usually not serious and go away without medical treatment.

HEPATITIS

3-49. Hepatitis is an inflammation of the liver that ranges from a mild illness lasting one to two weeks to a severely disabling disease lasting several months. The onset of the symptoms is abrupt with fever, malaise, anorexia, nausea, and abdominal discomfort, followed by jaundice (yellowing of the skin). Viral hepatitis occurs worldwide, particularly on the Indian subcontinent, North Africa, parts of Eastern Europe, and Asia, and tends toward cyclic recurrences. The incubation period can be 15 to 50 days but is more commonly 28 to 30 days. Maximum infectivity occurs during the latter half of the incubation period until after the first week of jaundice. Susceptibility is general. Humans are the main reservoir for the hepatitis A virus. Transmission is through direct and indirect person-to-person contact, as well as ingestion of fecal contaminated food or water and swimming in sewage-contaminated surface waters. Although water is an important means of transmitting hepatitis A, contaminated food tends to account for the majority of cases.

NOROVIRUS

3-50. The term *norovirus* is the recently approved official genus name of the group of viruses' also known as *Norwalk-like viruses*, *caliciviruses*, or small round-structured viruses. The incubation period is usually 24 to 48 hours, although symptoms can appear as early as 12 hours, and the illness generally lasts 24 to 60 hours. Symptoms include nausea, vomiting, watery diarrhea and abdominal cramps, and occasionally low-grade fever. *Noroviruses* are very common and occur worldwide. They are extremely contagious and are spread primarily via the fecal-oral route, via contaminated food and water, or spread directly from person-to-person. Infections may also be spread via environmental or inanimate objects or substances, such as clothing, furniture, or soap, which are capable of transmitting infectious organisms from one individual to another. There is also evidence that *norovirus* infections may be spread from inhalation of aerosolized vomit particulates. It is unlikely individuals can build immunity to *norovirus* due to the wide genetic variety of *noroviruses*; any immunity appears to be strain-specific and generally only lasts a few months.

Waterborne outbreaks of *norovirus* have often been traced to sewage contamination of wells and recreational water.

SECTION IV — APPROVED FIELD WATER DISINFECTANTS

WATER DISINFECTANTS USED AT UNIT-LEVEL

3-51. Members of unit field sanitation teams and Soldiers in the field rely on the following chemicals to disinfect drinking water:

- Calcium hypochlorite.
- Water purification tablets, chlorine.
- Water purification tablets, iodine.

CALCIUM HYPOCHLORITE

3-52. Calcium hypochlorite is a white granular or powdered chemical. It is supplied in six-ounce jars as a component part of the field sanitation kit. When fresh, it typically contains 68 to 70 percent by weight available chlorine. It is commonly referred to as high-test hypochlorite. The active component in calcium hypochlorite is chlorine. The chlorine content of calcium hypochlorite is the component that attacks the cell walls of bacteria which then interrupts and prevents the cells vital functions subsequently killing the organism.

3-53. The active ingredient of calcium hypochlorite is chlorine, which is the disinfectant normally specified for military use. Chlorine gas, liquid sodium hypochlorite (unscented bleach), high-test hypochlorite, and electrolytically produced chlorine solutions are sources of chlorine that can be used to disinfect water. Currently, chlorine is the only widely accepted chemical that destroys organisms in water and leaves an easily detectable residual (chlorine residual). No other disinfectant has been shown to be as acceptable or adaptable for field potable water treatment operations. A low-level or nonexistent chlorine residual in drinking water may be the result of inadequate disinfection procedures, subsequent contamination, or both. The sudden disappearance of normal chlorine residuals in a water system or storage container may indicate that contamination has occurred.

Note. Calcium hypochlorite is a strong oxidizing agent. When not properly stored it can cause irritation of mucus membranes and the respiratory tract, and corrode metal. Store calcium hypochlorite according to the safety data sheets.

EFFECTIVENESS OF CHLORINE DISINFECTION

3-54. The most important variables in the effectiveness of chlorine disinfection of drinking water include the chlorine—

- Dose.
- Demand.
- Residual concentration.
- Contact time.

CHLORINE DOSE

3-55. Chlorine dose is the amount of chlorine added per unit volume of water, is usually expressed in parts per million or its equivalent (milligrams per liter).

CHLORINE DEMAND

3-56. Chlorine demand is the amount of chlorine per liter of water that reacts with inorganic and organic matter, including microorganisms, and is no longer available for disinfection.

CHLORINE RESIDUAL CONCENTRATION

3-57. Chlorine residual concentration is the amount of free available chlorine that is available to be measured as a residual after the demand is completely satisfied. The chlorine residual will react with any contaminants that subsequently get into the water as well as prevent regrowth of inactivated bacteria in any storage and distribution system that may be in use.

CHLORINE CONTACT TIME

3-58. Chlorine contact time after the chlorine demand has been exceeded. This is the time that is established for the chlorine to react with and inactivate pathogenic microorganisms prior to consumption of the water. An increase in contact time provides better disinfection.

3-59. The effectiveness of chlorine disinfection can also be influenced by three factors—

- Adequate mixing.
- The pH of the water.
- Water temperature.

ADEQUATE MIXING

3-60. Adequate mixing of the chlorine into the water to ensure direct contact with the target microorganisms. The chlorine must be well dispersed and thoroughly mixed to ensure that all of the disease-producing organisms come in contact with the chlorine for the required period of time.

THE pH OF THE WATER

3-61. As the pH of the water increases from five to nine, the form of the free available chlorine residual changes from hypochlorous acid, (the most effective form) to the hypochlorite ion, (which is less effective). The most effective disinfection occurs when the pH is between 5.5 and 6.5. The typical pH of reverse osmosis-based water purification system treated water is around 5.5 which is the most effective pH for chlorine disinfection.

WATER TEMPERATURE

3-62. At lower temperatures, microorganism inactivation tends to be slower. To obtain the same level of disinfection at low temperatures as at higher temperatures, higher chlorine residuals or longer contact times are required.

DETERMINING CHLORINE RESIDUAL

3-63. When a unit draws bulk water supplies, the unit field sanitation teams are required to initially test for chlorine residuals and then monitor the chlorine residuals of unit bulk water supplies as directed. To accurately determine the chlorine residual of unit bulk water supplies members of the unit field sanitation teams have two types of test kits which they can use. They are—

- Chlorine residual test strips (most commonly found).
- N, N-Diethyl-1, 4 Phenylenediamine Sulfate test kit.

3-64. Steps for using the chlorine residual test strips are—

- Thoroughly wash hands before testing.
- Flush water through the taps of the trailer for several seconds before wetting the test strip.
- After wetting the test strip, carefully monitor the color changes of the strip.
- Compare the color of the free chlorine pads on the test strip to the color chart on the bottle. Estimate the results when the color of the free chlorine pads on the test strip falls between two of the color blocks on the chart then record and report the chlorine residual as required.

3-65. Procedures for using the N, N-Diethyl-1, 4 Phenylenediamine Sulfate test kit are—

- Thoroughly wash hands before testing.

- Flush water through the taps of the trailer for several seconds before filling the color comparator tube to a point just below the top of the tube.
- Place one chlorine test tablet in the comparator and allow it to dissolve.
- Hold the color comparator at eye level and toward a good light source.
- Compare the color of the water with the color disc on the opposite side of the color comparator.

CAUTION

When testing water with the N, N-Diethyl-1, 4 Phenylenediamine Sulfate test kit, carefully observe the color changes of the water. When the chlorine residual is above ten milligrams per liter, the water color will change through the test kit levels and then turns clear. Failure to carefully observe color changes may lead to excessive chlorination of the water supply.

- The water is safe to use if the color of the water is the same shade or darker than the required color for the chlorine residual. The water must be chlorinated if the color is lighter than the required residual.

RECHLORINATING UNIT BULK WATER SUPPLIES

3-66. When the chlorine residual of a unit bulk water supplies drops below the minimum acceptable levels, the water must be retreated to make it safe for human consumption. To rechlorinate water stored in a unit's water trailer, the volume of water present must first be determined to avoid using too much high-test hypochlorite thereby hyper-chlorinating the water and making it unpalatable until chlorine residuals drop to tolerable levels. Table 3-2 on page 3-14 provides a listing of minimum acceptable chlorine levels that must be maintained for water based on its intended use.

Table 3-2. Recommended field water chlorine residuals

Potable water requirements		
Action/location	***Chlorine residual***	***Comments***
Point of production and initial distribution into storage or transportation containers, or into a distribution system.	2 mg/L FAC	After a 30-minute contact time.
Delivery to secondary storage or distribution containers and systems.	1 mg/L FAC	If between 0.2 and 1 mg/L, rechlorinate to 1 mg/L and deliver. If less than 0.2 mg/L, rechlorinate to 2 mg/L and ensure that at least 1 mg/L FAC remains after 30 minutes.
Delivery to unit-level storage containers (for example, 400-gallon water trailers and five-gallon water cans).	1 mg/L FAC	If between 0.2 and 1 mg/L, rechlorinate to 1 mg/L and deliver. If less than 0.2 mg/L, rechlorinate to 1 mg/L and ensure that at least 1 mg/L FAC remains after 30 minutes.
Filling canteens, personal hydration systems, and other individual-use containers.	0.2 mg/L FAC	If less than 0.2 mg/L (or lowest measurable value), rechlorinate to 1 mg/L and ensure that at least 1 mg/L FAC remains after 30 minutes.
Bottled water.	No requirement	Vendor must be approved by veterinary service.
Packaged field water—when filling package (pouch, bottle, or other container).	1 mg/L FAC	Use of a lower or no residual after disinfection may be acceptable, but only after veterinary service and/or preventive medicine evaluation of equipment, operations, and water quality.
Fresh water approved for drinking		
Ground water approved by preventive medicine for drinking after only disinfection.	2 mg/L FAC	After a 30-minute contact time, prior to distribution.
Emergency only – Disinfecting natural surface water or well water under the direct influence of surface water for drinking—no other treatment available.	5 mg/L FAC	After a 30-minute contact time. Alternate emergency treatment is boiling fresh water for five minutes. Where *Cryptosporidium parvum* is suspected to be present in untreated water, boiling is the recommended emergency water treatment method because of the relative ineffectiveness of chlorine and iodine against that organism.
Nonpotable water for showers and personal sanitation		
Point of production and initial distribution into storage or transportation containers.	1 mg/L FAC	After a 30-minute contact time.
Delivery to intermediate storage or distribution containers and systems.	1 mg/L FAC	If used.
Deliver to unit-level containers.	1 mg/L FAC	For example, shower point storage containers.
Legend: FAC free available chlorine mg/L milligrams per liter		
Source: Table adapted from Technical Bulletin Medical 577/NAVMED P-5010-10/AFMAN 48-138_IP, page 17, table 2-6.		

CHLORINE DOSE CALCULATIONS

3-67. Tables 3-3 and 3-4 provide volumes listed in drops, milliliters, teaspoons, tablespoons, cups, and gallons of liquid bleach (unscented), high-test hypochlorite, and a concentrated calcium hypochlorite solution that, when added to a given volume of water to be chlorinated (indicated in the far-left column) will provide an approximate chlorine dose in milligrams per liter as indicated in the top row. The chlorine residual achieved using these values will be dependent on the chlorine demand exerted by the water that is chlorinated. If there is no chlorine demand, the residual will equal the dose. The greater the chlorine demand, the lower the residual will be.

Note. Parts per million are equivalent to values in milligrams per liter, for example, ten parts per million is equal to ten milligrams per liter.

3-68. Table 3-3 provides chlorine dose calculations when using volumes of five percent liquid (typical household) bleach will provide the indicated chlorine dose (identified in top row) when added to the corresponding gallons of water as identified in far-left column.

Table 3-3. Chlorine dose calculator using five percent liquid (household) bleach

Gallons of water to be chlorinated	*Chlorine dose*				
	1 mg/L	*2 mg/L*	*5 mg/L*	*10 mg/L*	*100 mg/L*
5	6 dp	0.75 mL	1.9 mL	3.8 mL	8 tsp
10	0.75 mL	1.5 mL	3.8 mL	1.5 tsp	16 tsp
25	2 mL	3.8 mL	2 tsp	4 tsp	1 cp
36	3 mL	5.5 mL	2.75 tsp	2 tbsp	1.25 cp
50	4 mL	1.5 tsp	4 tsp	3 tbsp	1.75 cp
100	7.7 mL	3 tsp	3 tbsp	5 tbsp	3.25 cp
400	2 tbsp	4.25 tbsp	0.75 cp	1.5 cp	3 qt
500	3 tbsp	0.33 cp	1 cp	1.75 cp	1 gal
1000	0.33 cp	0.67 cp	1.75 cp	3.25 cp	2 gal
2000	0.66 cp	1.34 cp	3.5 cp	6.5 cp	4 gal

Legend:
cp cups
dp drops
gal gallon
mg/L milligrams per liter
mL milliliters
tbsp tablespoons
tsp teaspoons

Source: Table adapted from Technical Bulletin Medical 577/NAVMED P-5010-10/AFMAN 48-138_IP, page 20, table 2-7.

3-69. Table 3-4 on page 3-16 provides chlorine dose calculations when using volumes of 70 percent high-test hypochlorite will provide the indicated chlorine dose (identified in top row) when added to the corresponding gallons of water as identified in far-left column.

Table 3-4. Chlorine dose calculator using 70 percent high-test hypochlorite or solution concentrate

Gallons of water to be chlorinated	*Chlorine dose*				
	1 mg/L	*2 mg/L*	*5 mg/L*	*10 mg/L*	*100 mg/L*
5	0.9 mL	1.7 mL	4.1 mL	8.3 mL	0.25 tsp
10	1.7 mL	3.3 mL	8.3 mL	16.6 mL	0.5 tsp
25	4.1 mL	8.3 mL	20.7 mL	41.4 mL	1.25 tsp
36	6 mL	11.9 mL	29.8 mL	0.9 mL	1.75 tsp
50	8.3 mL	16.6 mL	0.6 mL	0.25 tsp	2.5 tsp
100	16.6 mL	33 mL	0.25 tsp	0.5 tsp	5 tsp
400	0.92 mL	1.9 mL	1 tsp	2 tsp	19 tsp
500	1.3 mL	0.5 tsp	1.25 tsp	2.5 tsp	0.5 cp
1000	0.5 tsp	1 tsp	2.5 tsp	5 tsp	1 cp
2000	1 tsp	2 tsp	5 tsp	10 tsp	2 cp

Legend:
cp cups
HTH high-test hypochlorite
mg/L milligrams per liter
mL milliliters
tsp teaspoon

Note:
The shaded area of the table indicates the volume of a concentrated solution made from dissolving 1 tsp of HTH in a half canteen cup (1½ cups) of water.

Source: Table adapted from Technical Bulletin Medical 577/NAVMED P-5010-10/AFMAN 48-138_IP, page 20, table 2-8.

CONVERSION FACTORS

3-70. Table 3-5 is useful for converting from one unit of measurement to another. It shows equivalent values for common units of measurement. Unit volumes increase from left to right and from top to bottom. All volumes on the same horizontal line (row) are equal. For example, looking at the *ounce* row, we can see that one ounce equals 444 drops, 30 milliliters, six teaspoons, two tablespoons, one ounce, 0.125 cups, 0.063 pints, 0.031 quarts, 0.030 liters, and 0.008 gallons.

3-71. For example, if Soldiers need to add seven milliliters of bleach to a container of water, but they only have an eyedropper, they can see that each milliliter contains fifteen drops, so seven milliliters would be equivalent to 7 x 15, or 105 drops.

3-72. The values moving down a single column represent how many of the units at the top of the column make up one of the units on the left of the table. For example, proceeding down the column with *drop* at the top, there are 15 drops in a milliliter, 74 drops in a teaspoon, 3,550 drops in a cup, and 56,775 drops in a gallon. Similarly, looking at the *ounce* column, there are only 0.002 ounces in a drop, 0.5 ounces in a tablespoons, and 32 ounces in a quart.

Table 3-5. Equivalent volumes chart

	dp	*mL*	*tsp*	*tbsp*	*oz*	*cp*	*pt*	*qt*	*L*	*gal*
dp	1	0.067	0.013	0.004	0.002					
mL	15	1	0.200	0.067	0.033	0.0042	0.0021	0.0011	0.0010	
tsp	74	5	1	0.333	0.167	0.021	0.010	0.005	0.005	0.001
tbsp	222	15	3	1	0.500	0.063	0.031	0.016	0.015	0.004
oz	444	30	6	2	1	0.125	0.063	0.031	0.030	0.008
cp	3550	237	48	16	8	1	0.500	0.250	0.240	0.063
pt	7100	473	96	32	16	2	1	0.500	0.480	0.125
qt	14200	946	192	64	32	4	2	1	0.960	0.25
L	15000	1000	203	68	34	4.2	2.1	1.06	1	0.26
gal	56775	3785	768	256	128	16	8	4	3.785	1

Legend:

cp	cups	oz	ounce
dp	drops	pt	pint
gal	gallon	qt	quart
L	liter	tbsp	tablespoon
mL	milliliter	tsp	teaspoon

Source: Table adapted from Technical Bulletin Medical 577/NAVMED P-5010-10/AFMAN 48-138_IP, page 21, table 2-9.

3-73. Table 3–6 shows the equivalents between common fractions and decimals.

Table 3-6. Common fractions and their decimal equivalents

Fraction	*Decimal*	*Fraction*	*Decimal*	*Fraction*	*Decimal*	*Fraction*	*Decimal*
1/16	0.0625	5/16	0.3125	9/16	0.5625	13/16	0.8125
1/8	0.125	3/8	0.375	5/8	0.625	7/8	0.875
3/16	0.1875	7/16	0.4375	11/16	0.6875	15/16	0.9375
1/4	0.25	1/2	0.500	3/4	0.75	16/16	1.0000

CHLORINATION KIT (WATER PURIFICATION)

3-74. The chlorination kit (water purification) contains an emergency disinfectant mixed with a settling aid that helps remove dirt and other suspended particles from water by flocculation and sedimentation. If it is available, it should be used when the water to be treated is cloudy or discolored and the operational situation is such that the treatment bag can remain motionless for the required settling period and can then be filtered. The treatment kit includes three packages of ten tablets each, a treatment bag, and a cloth filter. Each tablet adds eight milligrams per liter of chlorine to one quart of water. Some kits contain three packages of 10 powder sachets in place of the packages of tablets. All other components and the treatment steps remain the same.

IODINE TABLETS

3-75. Iodine water purification tablets are intended to disinfect water contained in small containers such as canteens, personal hydration systems, and five-gallon water cans. The tablets are composed of an iodine compound and are available through the Army supply system in bottles of 50 tablets. The tablets are subject to deterioration in storage. They must be inspected for signs of physical change before they are used; otherwise, they may not disinfect the water. Iodine tablets that are completely yellow or brown, that stick together, or crumble easily are no longer effective and must not be used. Iodine tablets in good condition will be steel gray. See paragraphs 3-88 through 3-90, below, for the procedures for disinfecting small quantities of water with these tablets.

SECTION V — WATER STORAGE SYSTEMS

BULK WATER STORAGE SYSTEMS

3-76. Unit-level bulk water storage and distribution equipment includes—

- Unit water pod systems (Camel).
- Water Trailers M149A2, and M1112 trailers.
- Five-gallon plastic water cans.

UNIT WATER POD SYSTEM (CAMEL)

3-77. The Camel replaces the M149A2, M1112, and M107 series water trailers. It consists of an 800-gallon capacity baffled water tank, a thermal regulating module, and a filling stand for individual containers. The camel is mounted on a M1095 trailer which allows for better transportability on and off the road by utilizing the Family of Medium Tactical Vehicle Trucks. It holds a minimum of 800- gallons of water and provides two plus days of supply at a minimum sustaining consumption rate. It is operational from -25 degrees Fahrenheit to +120 degrees Fahrenheit. The system also contains six filling positions for filling canteens and five gallon water cans. In the absence of dispensing water, the Camel can chill a full water payload ranging in temperature between 65 degrees Fahrenheit and 120 degrees Fahrenheit to 60 degrees Fahrenheit +/- 5 degrees Fahrenheit at a minimum rate of 1.5 degrees per hour. It also dispenses chilled water to 60 degrees Fahrenheit +/- 5 degrees Fahrenheit at the minimum rate of 40-gallons per hour.

WATER TRAILERS M149A2, M1112, AND M107

3-78. The Army employs the M149A2, M1112, and M107 series 400-gallon water trailers to store and distribute drinking water to field units. The M1112 is a newer eight-wheeled water trailer with a cylindrical stainless steel tank and a wider footprint which makes it more stable during movement. The M149A2 water trailer with a stainless steel tank replaced the M149A1 fiberglass tank water trailers. More information on the M149A2 and M1112 water trailers is available in Technical Manual 9-2330-267-13&P.

FIVE-GALLON WATER CANS

3-79. Five-gallon water cans are part of a unit's water storage and distribution capabilities.

INDIVIDUAL WATER STORAGE SYSTEMS

3-80. Individual Soldiers carry water for personal consumption in—

- One-quart and two-quart canteens.
- Personal hydration systems that carry between 45- and 100-ounces of water.

SECTION VI — APPROVED WATER PURIFICATION PROCEDURES

3-81. The following water purification methods are effective and when adhered to, will ensure that Soldiers at the unit-level have safe water supplies that will prevent the transmission of waterborne disease.

CALCIUM HYPOCHLORITE TO DISINFECT BULK WATER SUPPLIES

3-82. To disinfect bulk water supplies add and dissolve one heaping teaspoon of high-test hypochlorite (approximately ¼ ounce) for each two gallons of water, or five milliliters (approximately seven grams) per 7.5 liters of water. The mixture will produce a stock chlorine solution of approximately 500 milligrams per liter, since the high-test hypochlorite has available chlorine equal to 70 percent of its weight.

3-83. To disinfect water, add the chlorine solution in the ratio of one part of chlorine solution to each 100 parts of water to be treated. This is roughly equal to adding one pint (16 ounces) of stock chlorine to each 12.5 gallons of water or (approximately ½ liter to 50 liters of water) to be disinfected. To remove any objectionable chlorine odor, aerate the disinfected water by pouring it back and forth from one clean container to another.

USING CALCIUM HYPOCHLORITE TO DISINFECT CANTEENS

3-84. The following procedures are used to purify water in a one-quart and two-quart canteen with calcium hypochlorite ampules:

- Fill the canteen with the cleanest, clearest water available, leaving an air space of an inch or more below the neck of the canteen.
- Fill a canteen cup half full of water and add the calcium hypochlorite from one ampule, stirring with a clean utensil until this powder is dissolved.
- Fill the cap of a plastic canteen half full of the solution in the cup and add it to the water in the canteen. Then place the cap on the canteen and shake it thoroughly.
- Loosen the cap slightly and invert the canteen, letting the treated water leak onto the threads around the neck of the canteen.
- Tighten the cap on the canteen and wait at least 30 minutes before using the water for any purpose.

Note. When disinfecting two-quart canteens double the calcium hypochlorite used to disinfect a one-quart canteen.

USING THE CHLORINATION KIT (WATER PURIFICATION) FOR PERSONAL HYDRATION SYSTEMS

3-85. When using the chlorination kit (water purification) to disinfect an individual water supply use the kit in accordance with the manufacturer's instructions to effectively treat the water. To use the chlorination kit (water purification) with the provided water treatment bags follow the instructions in table 3-7 on page 3-20.

Table 3-7. Instructions for using the chlorination kit (water purification)

Instructions for using the chlorination kit (water purification) for bulk water container systems	
Step 1	Add one quart of water to the water treatment bag (provided in the kit). The bag will be about half full. A different clean container can be used if the water treatment bag is not available.
Step 2	Using the guide provided in the instructions, and shown in the legend below, add one or two tablets/powder sachets to the water in the bag.
Step 3	Fold the bag top tightly three times and fold the tabs in.
Step 4	Shake the bag for about 1 minute or until the tablet(s) or powder dissolves completely.
Step 5	Let the bag sit for 3 minutes.
Step 6	Swirl the water in the bag for 30 seconds.
Step 7	Let the bag sit for either 7 or 15 minutes based on the water temperature, as described in the instructions and shown in the legend below.
Step 8	If the water is still cloudy, add an additional half tablet or one-half powder sachet and repeat beginning with step (4).
Step 9	Being careful not to disturb the settled material, pour the clear water above the settled material through the cloth filter (provided in the kit) into a clean canteen or other container. Avoid pouring settled material onto the filter cloth. Do not drink the water from the treatment bag without filtering it. If the filter cloth from the kit is unavailable, a clean cotton t-shirt can be used.
Step 10	Rinse the filter and treatment bag with treated water so they can be reused. Always filter the water through the same side of the filter cloth.
Instructions for using the chlorination kit (water purification) for hydration system reservoirs	
Step 1	Personal hydration systems require additional tablets/powder sachets based on the volume of water they hold. When using 70- and 72-ounce (two liter) reservoirs double the number of tablets described in the instructions, and when using 100- and 102-ounce (three liter) reservoirs triple the number of tablets/sachets.
Step 2	Fill a separate clean container with the amount of water to be treated.
Step 3	Follow directions outlined in steps 2 through 9 (above), and add the treated water to the hydration system.
Note: The chlorination kit (water purification) should not be used in the reservoir itself, skipping the filtration step, because of the location of the drinking tube at the bottom of the reservoir. This is where all the flocculent will settle which greatly affects the quality of the water drawn into the straw during consumption.	

3-86. Table 3-8 identifies the number of tablets or powder sachets that are necessary to purify a specific volume of water within a given temperature range.

Table 3-8. Chlorination kit (water purification) tablet or powder sachet addition instructions

Water temperature	*Number of tablets/powder sachets per volume*			*Waiting period time for Step 7*
	1 quart (1 liter)	*70 ounces (2 liter) bladder*	*100 ounces (3 liter) bladder*	
77°F (25°C)	1	2	3	7
58°F (15°C)	1	2	3	15
50°F (10°C)	1	2	3	15
41°F (5°C)	2	4	6	15

Legend:
°C degrees Celsius
°F degrees Fahrenheit

Source: Table adapted from Technical Bulletin Medical 577/NAVMED P-5010-10/AFMAN 48-138_IP, page 25, table 2-11.

USING IODINE TABLETS

3-87. The information contained in paragraphs 3-88 through 3-90 provides specific instructions for Soldiers using iodine tablets to purify water obtained in the field with five-gallon cans, personal hydration systems, and one- and two-quart canteens.

FIVE-GALLON WATER CANS

3-88. To disinfect a five-gallon water can you—

- Fill a five-gallon container with the cleanest, clearest water available.
- Dissolve 40 iodine tablets in a canteen cup full of water to disinfect any type of water.
- Add this solution to the five-gallon container of water and agitate the solution.
- Place the cap on the container loosely. Wait five minutes and then agitate the container vigorously to allow leakage to rinse the threads around the neck of the can.
- Tighten the cap and wait an additional 25 minutes before using the water for any purpose.

PERSONAL HYDRATION SYSTEMS

3-89. To disinfect a personal hydration system bladder you—

- Use two iodine tablets for 40-ounce water reservoirs, four iodine tablets for 70- or 72-ounce water reservoirs, and 6 for 100- or 102-ounce reservoirs.
- Allow 30 minutes of contact time before consuming the water.
- If the water to be treated is cloudy or discolored, either double the dosage or use the chlorination kit (water purification) in a separate container.

CANTEENS

3-90. To disinfect the water in a canteen you—

- Fill the canteen with the cleanest, clearest water available.
- Add two iodine tablets to each one-quart canteen full of water, or four tablets to two-quart canteens. A two percent solution of tincture of iodine may be used in place of iodine tablets.

Note. Five drops of two percent iodine liquid are equivalent to one iodine tablet.

- Put the cap on the canteen. Shake the canteen to dissolve tablets.

- Wait five minutes. Loosen the cap and tip the canteen over to allow leakage around the canteen threads.
- Tighten the cap and wait an additional 25 minutes before drinking.

SECTION VII — INSPECTING, CLEANING, AND SANITIZING WATER STORAGE EQUIPMENT

INSPECTING WATER STORAGE EQUIPMENT

3-91. Unit and individual water storage equipment must be properly maintained and serviced in order to continue to deliver safe water to the Soldier.

3-92. Unit field sanitation teams are responsible for inspecting and identifying deficiencies of the units' bulk water storage equipment. When inspecting unit water trailers regardless of capacity the inspection should be conducted using the appropriate technical manual for that piece of equipment. The inspection criteria listed on Department of the Army Form 5457 (*Potable Water Container Inspection*) can serve as a general guide for inspecting all unit bulk water storage containers.

3-93. Inspection and maintenance of personal hydration systems and canteens is the responsibility of the individual Soldier.

CLEANING AND SANITIZING WATER STORAGE EQUIPMENT

3-94. Equipment used for storage, purification, and distribution of potable water will be cleaned, sanitized quarterly.

Note. When working with containers large enough for a Soldier to climb into, leaders will adhere to standards for working in confined spaces set by the National Institute for Occupational Safety and Health. These standards are presented in National Institute for Occupational Safety and Health Publication Number 80–106.

CLEANING PROCEDURES FOR WATER CONTAINERS LARGER THAN FIVE GALLONS

3-95. Prior to general cleaning, rust and mineral deposits should be removed from metal tanks as follows:

- To remove rust DO NOT use a mechanical grinder or sanding device. These devices will degrade the surface of the tank and cause more rust. To remove the rust in a stainless steel tank, clean the rusted areas with water and scouring powder and a nonmetallic, nylon brush. Be sure to flush the tank thoroughly with clean water.
- Mineral deposits on the bottom of the tank can be removed by putting eight gallons of vinegar in the tank, leaving it for 5 to 6 hours, and then emptying and flushing the tank with clean water.

GENERAL CLEANING PROCEDURES

3-96. Clean the outside of the water container with water and a stiff bristle brush (soap is recommended, but is optional).

Note. For the 400-gallon water trailer, remove the drain plug located beneath the rear portion of the water trailer, and elevate the front of the trailer so the water will flow toward the drain.

- Prepare a soap solution by adding ⅓ cup of liquid detergent to 10 gallons of hot water.
- Thoroughly wash the inside surfaces of the water container with the soap solution and a long handle scrub brush.
- Clean the valves and spigots by flushing the soap solution through them. Drain the container by removing the drain plug.

- Rinse the container and spigots twice with water (preferably warm water) to completely remove the soap solution.
- Sanitize the container prior to filling it with drinking water.

SANITIZING METHOD ONE

3-97. Use this method if both water and the required chemicals are plentiful as follows:

- Fill the container full of water with about 100-milligrams per liter chlorine concentration.
- Mix or slosh the solution around so it contacts all the surfaces.
- Run some of the solution through the valves and spigots.
- Keep all interior surfaces wet with the solution for at least 60 minutes.
- Drain the disinfecting solution into a sanitary sewer or other approved location (not into a lake, stream, or storm drain).
- Rinse the container and spigots twice with potable water.

SANITIZING METHOD TWO

3-98. Use this method if either water or the required chemicals are in short supply as follows:

- Prepare five gallons of water with 100-milligrams per liter chlorine concentration.
- Using a long-handled brush, stick, or rod with a cloth secured to the end (or some other method), swab the interior walls of the tank every 10 minutes or as often as necessary to keep the walls wet with the solution.
- Run some of the solution through the valves and spigots.
- Drain the accumulated solution from the container into a sanitary sewer or other approved location (not into a lake, stream, or storm drain).
- Rinse the container and spigots twice with potable water.

STORAGE

3-99. Upon completion of method one or method two, if the water container is not going to be used for more than 30 days, open the faucets, valve, drain plug, and manhole cover, and allow the tank to air dry. After it is dry, close it up and repeat the cleaning and disinfection procedures prior to using it.

CLEANING PROCEDURES FOR FIVE-GALLON WATER CANS

3-100. The first step is to refer to Technical Manual 10-7200-200-13, then follow this preventive maintenance plan—

- Visually inspect the can and the cap frequently while in use. After coming out of the field, look them over again. Look for leaks, scratches or other damage. Check inside the can and cap to make sure they are clean.
- Clean the cans when they are dirty by washing them inside and out to include the cap. Use one ounce of an approved detergent for each gallon of hot water. Keep the water temperature below 180 degrees Fahrenheit. Water that is hotter will warp the plastic can. Wash with a clean cloth, sponge, or fiber brush.

Note. Do not use abrasives like scouring powder, steel wool, and metal sponges. They will scratch the can's surface and make it harder to clean them the next time.

- Add one gallon of the soap solution. Shake the can vigorously for one minute and then drain the solution. Drain some of the cleaning solution through the spigot to clean it.
- Rinse the can at least twice with warm water to remove the soap solution. Rinse clean water through the spigot to remove residual detergent.
- Sanitize the can prior to filling it with potable water.

CLEANING AND SANITIZING PERSONAL HYDRATION SYSTEMS AND CANTEENS

3-101. The best ways to care for the personal hydration system reservoir is to thoroughly clean and dry the reservoir after every use, especially if it was filled with anything other than water. Failure to routinely clean the hydration system may result in mold or discoloration of the components. If this happens the system can be thoroughly cleaned and put back into service.

Cleaning and Sanitizing the Personal Hydration System Reservoir

3-102. The personal hydration system should be cleaned by—

- Removing the reservoir (water bladder) from the cloth pack.
- Cleaning the reservoir with mild soap and hot water by scrubbing the inside with a bottlebrush.
- Air drying the reservoir by leaving the top opened.
- Filling the reservoir with water and adding two teaspoons of baking soda to remove odors. Let it sit overnight. Rinse thoroughly and air dry.
- Sanitizing the reservoir with water and two teaspoons of liquid bleach. Let it sit for 30 minutes. Rinse thoroughly and air dry. Run the water/bleach cleaning solution through the tube and scrub it with a long pipe cleaner, a flexible wire covered with cloth, or one of the specially made brushes. Be careful not to puncture the tube.
- Machine washing the pack in cold water with a mild detergent, and letting it air dry. Soldiers may also hand wash the pack in a field environment.
- Drying the pack thoroughly and completely before storing. This is the safest way to store the pack.

Cleaning and Sanitizing the Reservoir Bite Valve

3-103. Another source of potential contamination is the delivery tube and bite valve. Properly clean the valve as follows:

- First, pull the valve off of the tube end. Alternatively, if Soldiers just want to clean debris out of the diaphragm core, the valve body may be left on the tube's end.
- Second, grasp the rib at the valve's face and roll it backwards. This exposes the core piece with the slit opening.
- Third, pull the core off of the ribbed post. Then clean the valve parts with a cotton swab or toothbrush and some soapy water.
- Finish by rinsing all parts thoroughly and repositioning the valve core on the center post of the valve body. Then roll the outer sleeve forward again to complete the job.

Chapter 4

Food Service Sanitation

ROLE OF THE UNIT FIELD SANITATION TEAMS

•1. Unit field sanitation teams assist commanders and fellow Soldiers in preventing foodborne illnesses by inspecting—

- Unit-level food handling personnel and facilities to ensure a high level of personal hygiene, cleanliness, and sanitation.
- Procedures for food being transported to remote feeding sites.
- Unit feeding sites for safe recommended distances in relation to waste disposal sites and latrine facilities.
- Placement and maintenance of handwashing/sanitizing facilities.

•2. In 2011 the Centers for Disease Control and Prevention published estimates of foodborne illnesses that specifically identified eight foodborne pathogens that accounted for the majority of foodborne illnesses, hospitalizations, and deaths in the United States alone. The numbers provided in the Centers for Disease Control and Prevention estimates clearly demonstrate the necessity for strict adherence to established field hygiene and sanitation practices among Soldiers living in close proximity to each other in the field and when deployed. An outbreak of foodborne illness in the ranks can have a catastrophic effect on the ability of an organization to accomplish its mission. For additional information, refer to Army Regulation 30-22, Department of the Army Pamphlet 30-22, Army Techniques Publication 4-41, and Technical Bulletin Medical 530.

SECTION I — FOODBORNE PATHOGENS

MOST COMMON FOODBORNE PATHOGENS

4-3. Of the 31 known pathogens linked to foodborne diseases throughout the United States, eight known pathogens account for the majority of illnesses, hospitalizations, and deaths. They are as follows:

- *Campylobacter.*
- *Clostridium perfringens.*
- *Escherichia coli.*
- *Listeria monocytogenes.*
- *Toxoplasma gondii.*
- *Norovirus.*
- *Salmonella.*
- *Staphylococcus aureus.*

Note. Many of the pathogens that are found in improperly prepared and handled foods can also be found in water that is contaminated and not properly disinfected.

CAMPYLOBACTER

4-4. For more information regarding *Campylobacter* refer to paragraphs 3-28 through 3-30.

CLOSTRIDIUM PERFRINGENS

4-5. *Clostridium perfringens* is a spore-forming gram-positive bacterium that is found in many environmental sources, as well as in the intestines of humans and animals. *Clostridium perfringens* is commonly found on raw meat and poultry. It can survive in conditions with very little or no oxygen. Persons infected with *Clostridium perfringens* generally develop watery diarrhea and abdominal cramps within 6 to 24 hours (typically 8 to 12 hours) of exposure. The illness usually begins suddenly and lasts for less than 24 hours. Persons infected with *Clostridium perfringens* usually do not have fever or vomiting. The illness is not passed from one person to another.

ESCHERICHIA COLI (E. COLI)

4-6. For more information regarding the pathogen *E. coli* refer to paragraph 3-33.

LISTERIA MONOCYTOGENES (LISTERIA)

4-7. Listeriosis is a serious infection usually caused by eating food contaminated with the bacterium *listeria monocytogenes*. Typical outbreaks have shown the causative transmission agent to be contaminated milk, soft cheeses, raw fruits/vegetables, and ready-to-eat meats such as hot dogs and other delicatessen-type meats. Listerosis primarily affects older adults, pregnant women, newborns, and adults with weakened immune systems. Healthy adults can, on rare occasions, become infected with *listeria monocytogenes*. General recommendations to prevent infections with *listeria monocytogenes* include keeping the food service environment's food contact surfaces clean and sanitized. Cook raw food from animal sources thoroughly to a safe internal temperature. Train food service personnel on a continuous basis. Store all foods to protect them from contamination. Follow the Food and Drug Administration's advice for safety recommendation for handling of cantaloupe, watermelon, honeydew, and other melons.

TOXOPLASMA GONDII

4-8. *Toxoplasma gondii* is considered to be a leading cause of death attributed to foodborne illness in the United States. The definitive hosts are cats and other felines and the oocysts are transmitted through their feces into the soil. Infections happen from eating undercooked or raw meats (wild game, pork, and very rare beef), vegetables grown in contaminated soil, or contaminated water. It is estimated that there are more than 60 million Americans that carry the *toxoplasma gondii* parasite. Most personnel however, will never have symptoms because their immune system keeps the parasite from causing illness.

4-9. When illness does occur among healthy people, the symptoms are usually mild with flu-like symptoms such as tender lymph nodes, and muscle aches that may last for several weeks. However, the parasite remains in their body in an inactive state. It can become reactivated if the person becomes immune suppressed.

4-10. Generally, if a woman has been infected (usually from sand boxes, playgrounds, yards, or litter boxes that infected felines have defecated in) before becoming pregnant, the unborn child will be protected because the mother has developed immunity. If a woman is pregnant and becomes newly infected with toxoplasma during or just before pregnancy, she can pass the infection to her unborn baby (congenital transmission). The damage to the unborn child is often more severe the earlier the transmission occurs. Potential results can result in miscarriages and stillborn infants.

NOROVIRUS

4-11. For more information regarding the pathogen *Norovirus* refer to paragraph 3-50.

SALMONELLA

4-12. For more information regarding the pathogen *Salmonella* refer to paragraphs 3-37 through 3-38.

STAPHYLOCOCCUS AUREUS (STAPH)

4-13. Staphylococcal food poisoning is a gastrointestinal illness caused by eating foods contaminated with toxins produced by S*taphylococcus aureus*. The primary reservoirs are humans with animals rarely becoming carriers. The most common way for food to be contaminated with S*taphylococcus aureus* is through contact with food workers who carry the bacteria or through contaminated milk and cheeses. *Staphylococcus aureus* is salt-tolerant and can grow in salty foods like ham. As the germ multiplies in foods, it produces toxins that can cause illness. *Staphylococcal* toxins are resistant to heat and cannot be destroyed by cooking. Foods at highest risk of contamination with *Staphylococcus aureus* and subsequent toxin production are those that are made by hand and require no cooking. Some examples of foods that have caused staphylococcal food poisoning are sliced meat, puddings, some pastries, and sandwiches. *Staphylococcal aureus* toxins are fast acting, sometimes causing illness in as little as 30 minutes. Symptoms usually develop within 1 to 6 hours after eating contaminated food and generally include nausea, vomiting, stomach cramps, and diarrhea. The illness is usually mild and most people recover after one to three days. In a small minority of patients the illness may be more severe.

IMPORTANCE OF SANITARY PRACTICES IN FOOD HANDLING

4-14. To prevent foodborne illnesses all Soldiers who handle and prepare foods must not work when suffering from an illness (diarrhea, coughing) or injury (sores), and maintain high standards of personal hygiene and sanitation to prevent contamination of foods.

CONTRIBUTING FACTORS WHICH MOST OFTEN CAUSE FOODBORNE DISEASE OUTBREAKS

4-15. The unit field sanitation teams are the first line of defense for enforcing measures to prevent foodborne illness in the field.

4-16. Epidemiological outbreak data repeatedly identify five major risk factors related to food handler behaviors and preparation practices in food service facilities as contributing to foodborne illness—

- Improper holding temperatures.
- Inadequate cooking.
- Contaminated equipment.
- Foods from unsafe sources.
- Poor personal hygiene.

POTENTIALLY HAZARDOUS FOODS

4-17. Potentially hazardous foods are food products that generally have a history of association with illness in the absence of temperature control. Properly maintain potentially hazardous foods; hot foods at a product temperature of 135 degrees Fahrenheit (57 degrees Celsius) or above and cold foods at a product temperature of 41 degrees Fahrenheit (5 degrees Celsius) or below. The following are examples of potentially hazardous foods:

- Ground meat (beef, pork, and lamb).
- Chopped ham.
- Poultry (chicken, turkey, and duck).
- Fish, shellfish, and crustaceans.
- Eggs (except those treated to eliminate *Salmonella*).
- Milk and dairy products.
- Heat-treated plant food (cooked rice, beans, or vegetables).
- Potato salad.
- Cooked vegetables.
- Raw sprouts.
- Tofu and soy protein foods.

- Cut vegetables.
- Cut melons, including watermelon, cantaloupe, and honeydew.

HANDWASHING STATIONS

4-18. Hand hygiene is critically important and cannot be overemphasized in the prevention of foodborne disease. Thorough handwashing remains one of the most effective methods of preventing the spread of foodborne disease. To ensure that food handlers and detailed Soldiers routinely wash their hands, handwashing equipment must be placed at latrines, food preparation areas, and established dining areas. The unit field sanitation team members should be included in the planning process when establishing new bases of operations or occupying an existing base of operations to help determine the appropriate locations and number of handwashing facilities needed to support established troop strengths.

4-19. Effective handwashing facilities have the following components on station:

- Water (potable).
- Soap (soap is always the primary method to clean hands).
- Paper towels.
- Trash cans.
- Alcohol-based hand sanitizer (hand sanitizers must have a minimum one full minute of contact time to maximize effectiveness).

Note. Hand sanitizers are not a replacement for soap, when soap is available.

TRANSPORTING MEALS

4-20. When prepared meals must be transported to remote feeding areas, the unit field sanitation teams are responsible for inspecting the vehicles to ensure that the rations will not be contaminated during transport. The vehicles used to transport food to field feeding sites shall be clean, covered, and used exclusively for transporting food. Should the need arise to use multipurpose vehicles (normally used to transport personnel, equipment, supplies, and other items) to transport food, the vehicle must—

- Be completely washed with soapy water and rinsed to remove dirt, debris, and fuel, oil, or chemical residues.
- The vehicle shall be allowed to air dry prior to transporting food.
- Food containers, packages of single-use items, and utensils shall be placed on clean, dry pallets or other dunnage to prevent direct contact with the vehicle floor.
- Food may not be transported with bulk fuel or chemicals.

4-21. Transport of food with equipment and nonchemical supplies may be approved by preventive medicine personnel if required by the tactical situation and there is little or no risk of food contamination or adulteration.

4-22. Unit field sanitation team members must ensure that foods transported to that location arrive within prescribed time frames and temperatures ranges for hot and cold foods before they can be safely consumed.

REMOTE FEEDING USING INSULATED FOOD CONTAINERS

4-23. Insulated food containers are used to keep hot foods hot and cold foods cold. Each container has three inserts with tight-fitting covers. Each plastic insert may be filled to 5 ⅓ liters- (5 ⅔ quarts-) capacity. Hot and cold food should be stored in separate containers. The insulated food containers may also be used to transport tray packs. Food can be maintained above 140 degrees Fahrenheit (60 degrees Celsius) or below 40 degrees Fahrenheit (4.4 degrees Celsius) for up to 4 hours in harsh conditions while remaining in compliance with food safety standards.

4-24. Units may send hot meals forward to remote sites using insulated food containers. Providing hot food to Soldiers using this method requires intensive management by commanders, unit leaders, and unit food service specialists. It is essential that prepared food placed in insulated food containers not be served

after the annotated time limit (for up to 4 hours after preparation) to prevent foodborne illness. Mandatory labeling of all food containers will be accomplished by the food operations team. Labeling will include, at a minimum, the contents of each insulated food container and the time to discard the product. Serving potentially hazardous food products after the maximum of 5 hours is prohibited for obvious food safety reasons.

4-25. The 4-hour food safety time limit is the maximum amount of time that foods may be held in insulated food containers. The safety of the food deteriorates the longer it is held in insulated food containers. To ensure the freshest food is served to Soldiers, food service specialists should use batch preparation and progressive cookery to the maximum extent possible and only prepare and place foods in the insulated food container for the minimum time needed to meet mission requirements.

PREHEATING THE INSULATED FOOD CONTAINER

4-26. A properly heated container will keep food hot or cold for up to 4 hours. To help maintain safe temperatures for hot foods, preheat the insulated food container before the food is placed into the container by—

- Removing the inserts.
- Pouring two quarts (1.9 liters) of boiling water into the container.
- Replacing the inserts.
- Closing the container lid and securing the latches diagonally.
- Letting them stand for at least 30 minutes.
- Opening and removing the inserts.
- Pouring water from the container.
- Putting hot food in the inserts and replacing the insert covers (with gasket).
- Placing the filled inserts in the container.
- Closing and fastening the container lid by securing the latches diagonally.

Note. Polymeric tray packs become flexible when heated. Use divider bars provided with each insulated food container when placing tray packs onto shelves in the container.

CHILLING THE INSULATED FOOD CONTAINERS

4-27. If a container needs to be chilled before food is put into it, the following steps apply:

- Remove the inserts.
- Put crushed ice or 2 quarts of ice water in the container.
- Replace the inserts.
- Close the container lid and secure the latches.
- Let stand for 30 minutes.
- Open and remove the inserts.
- Pour ice or water from the container.
- Put food in the inserts and fasten the lids.
- Place the filled inserts in the container.
- Close and fasten the container lid by securing the latches diagonally.

LABELING INSULATED FOOD CONTAINERS

4-28. Label each food container after it is filled. A good label can be made by placing a strip of masking tape across the top of the container lid. Write the menu item, the number of servings, the date, the time the item was placed in the container, and consume by or discard (fill in the time, the entry should state the time 4 hours after the container was filled) on the tape.

4-29. If the food is transported to other sites, use a code letter or color to identify each site. Make sure that each site has a complete menu. Write the menu items, the number of servings, the date and time prepared,

consumed by or discard date and time, and the site code on each container label. For feeding small units, put a separate insert of meat, starch, and vegetable in each insulated food container.

CLEANING INSULATED FOOD CONTAINERS

4-30. Clean the insulated food container and the inserts before and after every use. Never immerse the container itself in water. Remove the inserts and gaskets and wash them in hot, hand- or dishwashing compound solution. Then rinse and sanitize the parts in water at 171 degrees Fahrenheit or greater. After Soldiers have washed the gaskets from the food container, put them back on the container with the flat sides down and let them dry that way. Place the gaskets from the insert covers back on the insert covers and let them dry. If taken care of properly the rubber gaskets will not warp or lose their shape.

CLEANING FOOD PREPARATION AND SERVICE EQUIPMENT

4-31. Cooking utensils are washed, rinsed, sanitized, and properly stored after each use.

SECTION II — HYGIENE STANDARDS FOR FOOD HANDLERS

FOOD SERVICE PERSONNEL AND DETAILED SERVERS

4-32. Food handlers can be a primary source of disease and food contamination if high standards of personal hygiene are not maintained. Properly supervised food service personnel are less likely to overlook these important steps in the preparation and service of foods.

4-33. Unit field sanitation teams help to ensure that established sanitation standards and personal hygiene practices are understood and practiced by all unit food handlers.

HANDWASHING AND SANITIZING

4-34. In addition to the handwashing and sanitizing standards outlined in Chapter 2 (paragraphs 2-16 through 2-19), Soldiers detailed as food handlers must thoroughly wash their hands and arms prior to beginning duty and again before preparing food.

4-35. Handwashing and sanitizing should also be performed after—

- Servicing burner units or handling fuel cans.
- Handling soiled or contaminated equipment or utensils.
- Using tobacco products.
- Completing preparation one type of food item, to begin preparing another.
- Performing custodial duties, including handling garbage or other refuse.
- Moving or unloading rations.

SUPERVISING AND INSPECTING FOOD HANDLERS

4-36. Soldiers detailed to be servers must brush off as much dirt and loose debris from their uniforms as is possible before and thoroughly wash their hands and arms. Single-use disposable plastic food service gloves (if available) should be provided to servers for use during meals. If the gloves become soiled with food or are otherwise contaminated during serving, the gloves must be changed.

4-37. Supervisors should monitor and inspect these Soldiers to ensure that they are—

- Wearing clean garments and maintaining high standards of personal cleanliness.
- Wearing headgear to keep hair away from foods and food contact surfaces.
- Not using tobacco products when preparing or serving food or while engaged in any activity in food preparation areas.
- Avoiding unnecessary hand contact with food.
- Preparing and serving food with clean utensils.

Note. Unauthorized personnel should never be allowed in food preparation, storage, or sanitation areas.

4-38. Leaders must inspect company and detailed food handlers prior to their assuming their duties. The inspection should be both visual and verbal to identify—

- Signs of injury or illness—
  - Cuts, sores, burns, boils, rashes, or other skin or wound infections.
  - Ask the Soldier if he has diarrhea. If so he cannot be used as a food handler and must be seen by unit medical personnel.
  - Signs of respiratory illness (coughing or sneezing).
  - If a Soldier has a sore throat with fever.

Note. Soldiers detailed as servers are responsible for reporting any symptoms of infection or disease they may be experiencing before they begin work or at the time a problem develops.

- Unclean hands and fingernails. Fingernails must not have nail polish or embedded jewelry, must be trimmed, and must not extend beyond the fleshy tip of the finger. False nails or nail extensions are prohibited. Cuticles must be cleaned and trimmed.
- Unauthorized jewelry. Plain wedding band and medical alert devices are the only jewelry allowed.
- Unclean or improper headgear.
- Unclean or improperly maintained clothing.

Note. Proper hygiene practices for food handlers are found in Technical Bulletin Medical 530.

4-39. Camouflage paint or other skin coatings are poisonous and toxic materials when consumed. Food service specialists preparing food or detailed Soldiers performing sanitation duties should not wear camouflage paint on their hands, arms, or face. At remote feeding sites, individuals serving food or performing basic site cleanup may wear camouflage paint but they must wear disposable single-use gloves.

SECTION III — PEST CONTROL

INSECTS

4-40. Garbage cans should be kept covered with tight-fitting lids and the contents disposed of promptly to prevent breeding. Subsistence should be stored on pallets away from walls to eliminate hiding places and to facilitate inspection and cleaning. If possible, subsistence should be on shelves or on top of dunnage that raises the items a minimum of six inches off the floor or ground and a minimum of four inches away from walls to permit cleanup of spills. In open storage, supplies should be covered with tarpaulins or clear plastic when practical. Broken containers of food should be cleaned up quickly and completely. If areas do become infested, pesticides may be used as a last resort in accordance with Integrated Pest Management.

RODENTS

4-41. The first step in rat and mouse control is to prevent their entry into the storage facility. Holes should be covered or filled in and doors should close tightly. The next step is to eliminate rodent hiding places by placing subsistence on pallets away from walls. Finally, their food sources should be eliminated by proper garbage disposal and good housekeeping. If areas become infested, traps and poison baits can be used for elimination. The use of poison baits must be approved by the medical authority. The approval decision is based on compliance with environmental stewardship principles. All environmental laws and regulations must be adhered to in the use of poisonous baits.

This page intentionally left blank.

Chapter 5

Waste Management

IMPORTANCE OF WASTE MANAGEMENT

5-1. Proper management of waste materials generated in the field is critical in protecting the health of Soldiers and the environment. Handling these materials improperly can create dangerous working conditions, damage vital natural resources, impede mission accomplishment, and cause irreparable harm to training areas. Poor waste management practices can also lead to criminal and civil penalties, substantial cleanup costs, and detract from the military's relationships with local communities and host nations. As a result, the Department of Defense demands integration of environmental considerations into all military planning and decision making.

ROLE OF THE UNIT FIELD SANITATION TEAMS

5-2. Unit field sanitation teams provide —

- Awareness training on the dangers associated with the handling of hazardous waste materials.
- Monitoring of company- or unit-level waste management programs and facilities.
- Training Soldiers on the appropriate use of personal protective equipment that must be used during waste management operations.

5-3. Unit field sanitation teams also assist the unit commander in conducting inspections of waste management practices and provide supervision of—

- The construction and maintenance of human waste disposal facilities.
- The construction and maintenance of garbage and soakage pits.

Note. Unit field sanitation team members are only responsible for advising leadership on sanitation matters and supervising the construction and maintenance of sanitation facilities. The actual construction and maintenance is to be performed by detailed Soldiers.

CLASSIFICATION OF WASTE MATERIALS

5-4. Waste materials are classified to determine the method in which they must be disposed of to prevent harm to people and the environment. Classifying waste also identifies items or component parts of some items which can be reclaimed and reused to conserve resources.

MANAGEMENT AND DISPOSAL OF WASTE MATERIALS

5-5. At the unit-level, collection and storage of solid waste is the responsibility of each Soldier and is monitored by the unit field sanitation teams. (Refer to Technical Bulletin Medical 593.)

5-6. In an effort to minimize the amounts of nonhazardous solid waste, commanders should have Soldiers focus on a strategy of source reduction and reuse. Commanders, supervisors, and unit field sanitation team members should continually seek ways to reuse or reduce the generation of waste materials. Source reduction and reuse are the preferred means of pollution prevention, and are often easily implemented (for example, using empty boxes as storage bins).

SEPARATION

5-7. Source separation should be used to remove recyclable, reusable, and marketable materials to reduce the quantity of waste requiring disposal. The best means of achieving appropriate segregation is by

providing separate, labeled containers for different types of waste. A less desirable option is to take waste and recyclables to a consolidated separation yard where assigned personnel manually segregate the waste.

STORAGE

5-8. All solid waste should be placed in plastic bags, tied, and consolidated as quickly as possible at designated waste collection points. These collection points should employ closeable containers such as dumpsters or garbage cans with lids. Cardboard boxes should be broken down prior to placement in dumpsters to reduce volume. Waste collection points should be located at least 300 feet downslope and downwind from troop billeting and at least 100 feet from dining facilities wells, surface water, and base camp boundaries. Receptacles, dumpsters, and compactors used by dining establishments will also be cleaned according to the guidelines in Technical Bulletin Medical 530. Before departing a field site, commanders should ensure no solid waste (including wire, sandbags, brass, and paper) remains in the training area.

COLLECTION

5-9. Waste should be removed at least twice per week from collection points and daily from food service facilities. A contractor will often perform collection services, particularly if wastes are disposed in a municipal facility. The collection method will depend on the disposal method, which is a factor of unit size. Solid waste should be collected in a vehicle dedicated for that purpose. If a vehicle is converted for use in trash collection, this vehicle should have a low gate for easy access and a suitable cover, such as chicken wire or canvas, to keep trash from blowing off. Vehicles that have been used to transport trash must be cleaned prior to use for other missions. For example, the truck must be cleaned and sanitized with 200 milligrams per liter chorine solution prior to transporting foodstuffs.

DISPOSAL METHODS FOR NONHAZARDOUS SOLID WASTE

5-10. The primary options for disposal of nonhazardous solid waste in the field are burning, burial, or backhauling. Within the United States all solid waste generated during field exercises must be backhauled to garrison or picked up by contractors. During overseas training exercises, host-nation requirements must be followed which normally require the same policies of backhauling or contract disposal. If incineration, burning, or landfilling is used during contingency operations, additional security measures must be taken to deter scavenging by local populations.

INCINERATION

5-11. The use of open-air burn pits has generated considerable debate in regard to the potential health threats associated with breathing in smoke emitted from the incineration of certain types of waste. To address these concerns the Department of Defense Instruction 4715.19 which outlines the use of open burn pits during contingency operations. In the absence of host-nation support, the preferred method of solid waste disposal in the field is incineration (unless smoke and flames would compromise the tactical situation). This method should only be used for stays of a week or more. Supporting engineer personnel should be consulted prior to construction or use of any improvised incineration device. Open burning, to include barrel incinerators (see figure 5-1), should only be used in emergency situations until approved incinerators can be obtained.

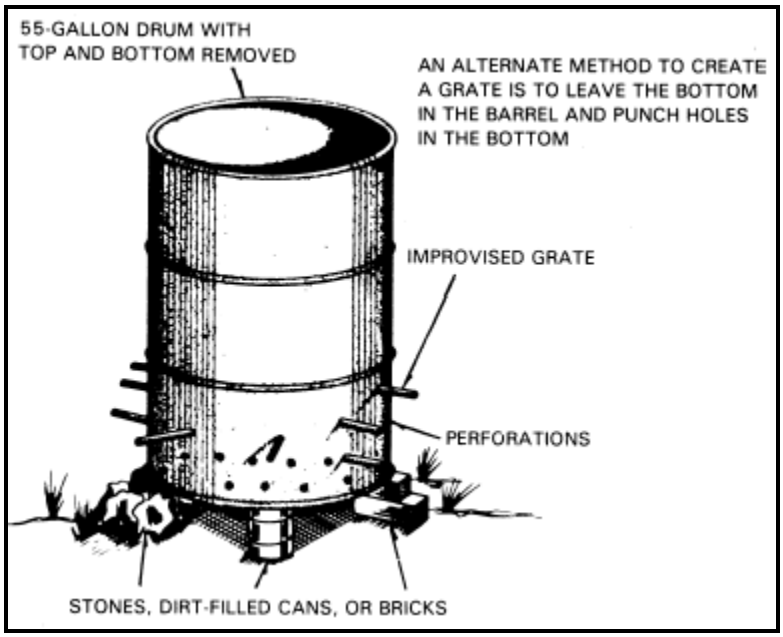

Figure 5-1. Improvised barrel incinerator

BURN PITS

5-12. An open-air burn pit is defined as an area, not containing a commercially manufactured incinerator or other equipment specifically designed and manufactured for burning of solid waste, designated for the purpose of disposing of solid waste by burning in the outdoor air at a location with more than 100 attached or assigned personnel and that is in place longer than 90 days.

5-13. Generally, open-air burn pits should be a short-term solution during contingency operations where no other alternative is feasible. For the longer term, incinerators, engineered landfills, or other accepted solid waste management practices shall be used whenever feasible. When used, open-air burn pits shall be operated in a manner that prevents or minimizes risks to human health and safety of Department of Defense personnel and, where possible, harm to the environment. As a result, all burn operations should be conducted as far downwind as possible (at least 450 feet) from troop locations and living areas.

MINIMUM REQUIREMENTS FOR OPERATING AN OPEN-AIR BURN PIT

5-14. For each contingency operation, the operational commander shall develop and approve a solid waste management plan. The use of open-air burn pits shall not be allowed unless included within this plan. This plan must also address the disposal of any covered waste, to include the provision of supporting resources. This plan is reviewed and revised annually, at a minimum.

5-15. The plan ensures that open-air burn pits are—

- Located at least 450 feet from troop locations and living areas to prevent or minimize exposures to personnel in living, dining, and work areas. Positioning of each burn pit must be coordinated with the requisite medical authority for the site and local officials and conform to regulatory policies for the specified region.
- Operated in a safe and secure manner for those operating the burn pit or present in the vicinity of the burn pit, this will prevent outside personnel from looting and possibly injuring themselves in the burn pit.
- Located where the burning or presence of garbage will not pose an unsafe attraction to birds or other wildlife into or across the path of aircraft in the air or on the ground, or in any way impact the ability of air traffic controllers to maintain eye contact with aircraft in the local traffic pattern.

- Operated in a manner that minimizes the attraction of vermin, flying insects, or wild animals which could pose a direct or indirect (disease vector) risk to human health.
- Inspected not less often than weekly for compliance with this instruction.
- Monitored daily for effective operations and compliance with waste stream restrictions by personnel trained in the requirements of this instruction and the approved solid waste management plan.
- Monitored by qualified force health protection personnel for unacceptable exposures, consistent with Department of Defense Instruction 6055.05 and acute and chronic health risks, consistent with Department of Defense Instruction 6490.
- Properly closed with locations documented.

5-16. In no case are munitions and explosives to be disposed of in burn pits with any other waste even if those burn pits are allowed according to this instruction. Department of Defense guidance on the destruction of munitions and explosives is contained in Department of Defense Manual 6055.09-M.

5-17. Waste disposal activities that do not meet the definition of open-air burn pits should strive to meet the intent of Department of Defense Instruction 4715.19. Combatant commanders shall issue specific engineering and medical guidance that maximize protection of human health and safety for locations where covered waste is either being burned because no alternative is feasible or the facility does not meet the definition of an open-air burn pit.

BURIAL

5-18. If burning or contract removal is not an option, solid waste must be buried (see figure 5-2). Soil types, rainfall, drinking water sources, and waste quantity are some of the factors to consider when using this waste disposal method. At a minimum, burial sites must be located at least 300 feet from any natural water source used for cooking or drinking such as a stream, lake, or well. The burial site should also be at least 100 feet from kitchens (or food consumption sites) to minimize problems with insects, rodents, and odor.

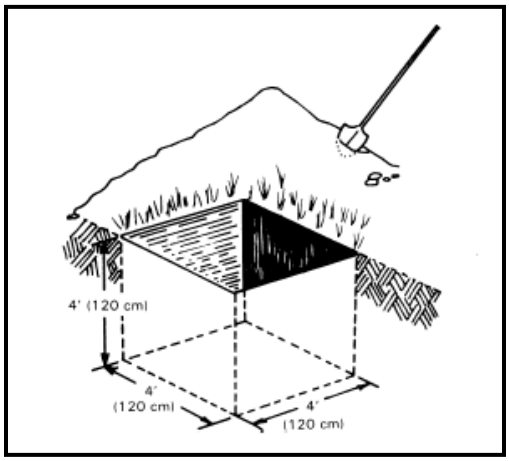

Figure 5-2. Garbage burial pit

LANDFILLING

5-19. Preexisting landfills should be used whenever possible. If an adequate landfill does not exist, the supporting engineers or a contractor may construct one. Care should be taken to ensure these landfills are maintained and operated properly, and permitted if required. Ensure that proper waste segregation is maintained so no hazardous waste enters and contaminates the landfill, (this is due to the fact that not all landfills are lined landfills and hazardous waste contaminates could leach into the water supply).

TACTICAL BURIAL

5-20. On the march, or in the field for less than one week in duration, solid waste should be buried in pits or trenches. Pits are preferred for overnight halts. A pit 4 feet square and 4 feet deep is suitable for 1 day for a unit of 100 individuals. For stays greater than 2 days, a continuous trench is preferable since it can accommodate a large amount of garbage and allows for a daily coverage of earth as the trench is extended. The trench is first dug about 2 feet wide, 3 to 4 feet deep, and long enough to accommodate the garbage for the first day. As in the pit method, the trench is filled to not more than 1 foot from the top. The trench is extended as required, and the excavated dirt is used to cover and mound the garbage already deposited. This procedure is repeated daily or as often as garbage is dumped.

WASTEWATER

5-21. Roughly 80 percent of all water used for purposes other than human consumption ends up as wastewater which requires treatment and disposal. The volume of wastewater alone presents a significant challenge, and depending on the source, it may contain suspended solids, organic material, biological organisms, and toxic chemicals that will require treatment prior to disposal. This information expands upon the discussion presented in Chapter 2 to describe how to develop a wastewater management plan. Wastewater is organized into two categories—gray and black water.

BLACK WATER

5-22. Black water refers to latrine wastewater containing human waste and is discussed in more detail in paragraph 5-40.

GRAY WATER

5-23. Gray water refers to wastewater from nonlatrine sources such as showers, laundry, kitchen operations, vehicle wash racks, and hand wash devices. Management of this wastewater is mission-specific and depends upon factors such as field conditions, the number of Soldiers, volume of gray water, and the anticipated length of stay at a given location. Gray water management develops from primitive, in the initial stages, to semipermanent as the base matures. Some solutions (for example, lagoons or leach fields) require considerable space that may not be available after construction of other camp infrastructure. Other solutions (for example, self-provided treatment plants) need to be ordered at the beginning of deployment. Wastewater treatment plants may also require gray water to dilute concentrated black water.

5-24. Make use of existing facilities that are available. If deployed near a municipal wastewater treatment plant or sewage line, coordinate with local contracting and environmental offices to determine if connection to a municipal wastewater treatment plant via collection lines is economically feasible and environmentally sound.

5-25. Gray water from showers and laundry will be discharged to the best facility available be it municipal or camp wastewater treatment plant, leach field, or facultative lagoon according to camp standards.

DISPOSAL METHODS FOR GRAY WATER

5-26. Traditional field expedient methods for disposal of gray water include soakage pits, soakage trenches, and evaporation beds. Based on soil characteristics and weather conditions, these methods will usually be sufficient to handle the generated gray water from laundry, shower, and dining facilities for short periods of time. Some general engineering or specialized engineer support may be required to construct and operate these field-expedient methods, and earthmoving equipment may be necessary based on the volume of gray water generated. Waste management planners must attempt to identify these requirements and request augmentation as early in the planning phase as possible.

5-27. These field-expedient devices, especially soakage pits, are generally constructed for small volumes of gray water; however, with proper design and operation, they can be effective for larger volumes. Since these methods result in final disposal, some pretreatment may be necessary to remove grease, particulate matter, and organic material. Assistance in the form of technical advice may be obtained from supporting

engineer units, preventive medicine personnel, higher headquarters, and United States Army Public Health Command support teams, or through reachback.

5-28. Soakage pits and evaporation beds may be impossible in arctic environments or in areas with high water tables. In these situations, the use of constructed wetlands or holding basins may be an alternative if the necessary heavy construction assets are available; if not, the only alternative may be to temporarily contain gray water in tanks or drums for removal by military units or contractors. Requirements for alternate methods must be identified as early in the planning phase as possible to facilitate the long lead times for acquiring funding, contracts, and/or project approval, and for design and construction.

SOAKAGE PITS

5-29. A standard soakage pit is constructed by digging a pit that is four feet square and four feet deep. This sized pit will handle about 200 gallons per day and accommodate a kitchen serving 200 personnel. When a soakage pit is used for kitchens, a grease trap must be used. If the camp is to last for several weeks, construct soakage pits in pairs and alternate their usage on a daily basis to provide a rest period and help prevent clogging. In camps of long duration, each soakage pit should be given a rest period of one week every month. A clogged soakage pit will not accept liquid, and must be properly closed. To close a soakage pit, backfill and compact with soil one foot above the grade and mark the pit.

5-30. Pits should not be deeper than four feet to prevent the need for wall shoring during construction. Occupational Health and Safety Administration standards state that six feet is the depth that requires shoring and further increase the construction effort. The bottom of the pit should be at least two feet above the ground water table and five feet above rock or other impermeable soil conditions. The pits should be located outside the base camp if possible and at least 100 meters feet down gradient from any water source.

Note. The Occupational Health and Safety Administration standards state that pits dug to a depth of six feet require shoring.

5-31. To accommodate a larger quantity of gray water, longer pits can be dug, or several smaller pits may be preferred. When more than one pit is used, ensure that there is equal distribution of the wastewater to all the pits. The distance between soakage pits should be at least twice the size of the pits. The effective absorption area of a pit or number of pits is based on the total area of the walls in the pit and not the bottom of the pit. See figure 5-3.

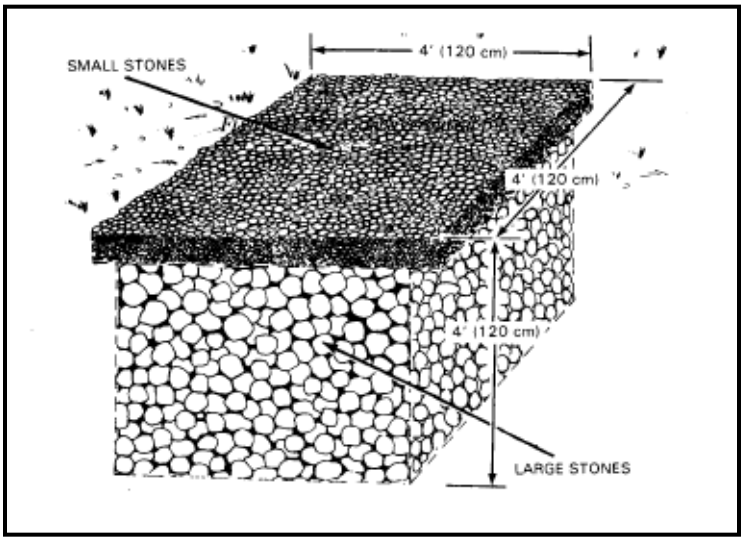

Figure 5-3. Standard soakage pit

SOAKAGE TRENCHES

5-32. If the ground water level or a rock formation prevents digging a pit, a soakage trench may be used. A soakage trench consists of a central pit that is two feet square and one foot deep. The pit has a trench radiating outward from each side for a distance of six or more feet (see figure 5-4). The trenches are one foot wide and increase in depth from one foot at the central pit to one and one half feet at the outer end. The central pit and the radiating trenches are filled with gravel or broken rock. Two units are built for every 200 Soldiers being provided food, laundry, or shower services; and their usage is alternated on a daily basis. A grease trap is used with the soakage trench for kitchen waste.

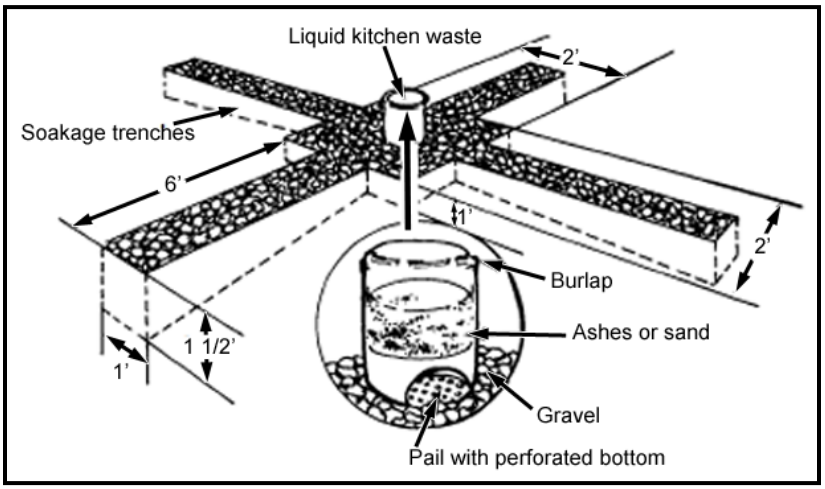

Figure 5-4. Soakage trench with barrel filter grease trap

GREASE TRAPS

5-33. The gray water generated from dining facilities is heavily contaminated with food particles, cooking oils, grease, detergents, and other cleaning agents which can clog the soil and prevent absorption. A grease trap must be provided for soakage pits that accept kitchen waste. Grease traps are constructed to remove these contaminates from the gray water before disposal. Grease traps must be cleaned frequently and the contents burned or buried according to the guidance or procedures established for the area of operations. A grease trap should be large enough to prevent the addition of hot, greasy water from heating the cool water already in the trap. Otherwise, grease will pass through the trap instead of congealing and rising to the top of the water. There are two types of grease traps—the filter and the baffle.

Baffle Grease Trap

5-34. A baffle grease trap is constructed from a 55-gallon drum or box (see figure 5-5 on page 5-8). The box or drum is divided vertically into unequal chambers by a wooden baffle. This baffle should extend to within one inch of the bottom. The baffle grease trap is usually placed on the ground at the side of the soakage pit with the outlet pipe extending 1 foot beneath the surface at the center of the pit. Waste is poured through a strainer into the large chamber. The liquid waste is strained of solids and debris before it goes into the entrance chamber of the trap. It then passes under the baffle and flows out into the small chamber. In the large chamber, the trap should have a removable lid and a strainer. The strainer may be a box with openings in the bottom. Fill the strainer with straw or burlap to remove coarser solids. Before the grease trap is used, the chambers are filled with cool water. When warm liquid strikes the cool water in the entrance chamber, the grease rises to the surface and is prevented by the baffle from reaching the outlet to the soakage pit. If the water is warm, proper separation of the grease will not occur. This is often the case in hot climates. The grease retained in the entrance chamber is skimmed from the surface of the water daily or more frequently as required and buried. Clean the strainer frequently by scrubbing it with soap and water to prevent clogging. Insert a one inch pipe, three to six inches below the top of the smaller chamber to carry liquid from the trap to the soakage pit. Clean the trap frequently to ensure proper operation.

Remove the grease, drain the trap, and remove the sediment from the bottom. Burn or bury the grease, sediment, and strained material.

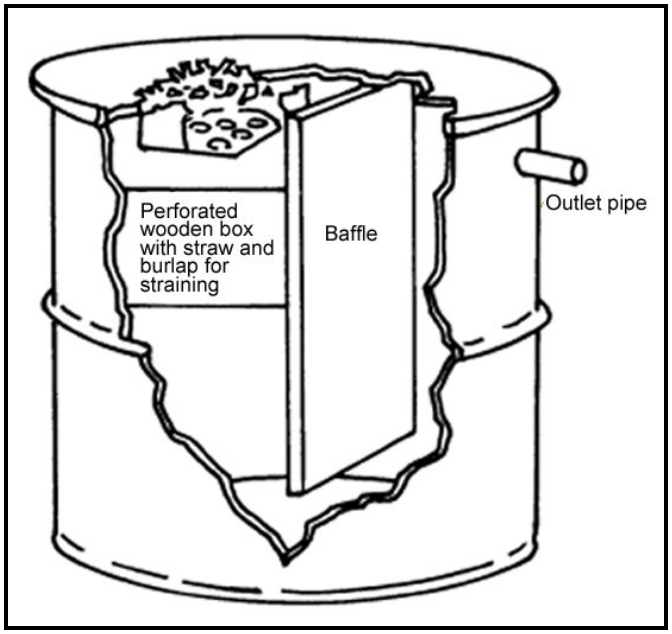

Figure 5-5. Baffle grease trap

Barrel Filter Grease Trap

5-35. The barrel-filter grease trap is constructed from a 30- to 55-gallon barrel or drum (see figure 5-6). Remove the barrel top and bore a number of large holes into the bottom. Place 8 inches of gravel or small stones in the bottom of the barrel and cover them with 12 to 18 inches of wood ashes or sand. Fasten a piece of burlap to the top of the barrel to serve as a coarse strainer. Place the trap directly over the soakage pit or on a platform with a trough leading to the pit. If the trap is placed over the pit, remove the bottom instead of boring holes into it. Empty the trap every two days. Wash the trap, remove and bury the ashes or sand, and refill the trap with fresh ashes or sand. Wash the burlap strainer every day or replace it.

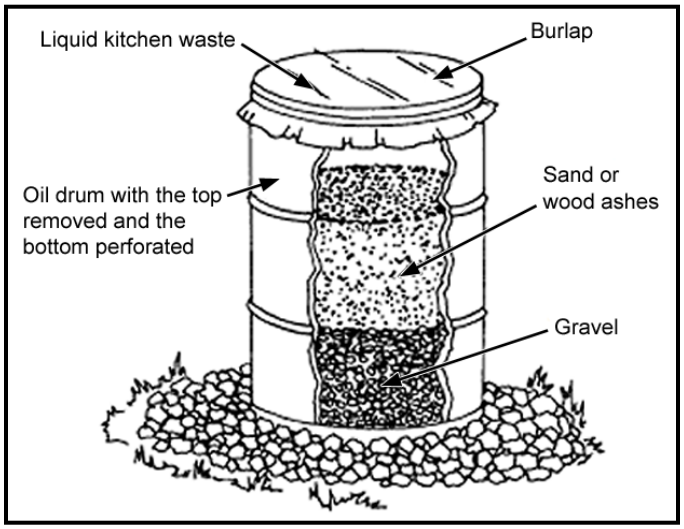

Figure 5-6. Barrel filter grease trap

EVAPORATION BEDS

5-36. An evaporation field is probably the simplest method of disposing of large amounts of gray water (see figures 5-7 and 5-8). Evaporation beds may be used in hot, dry climates or in places where a high ground water table or clay soil (poor soil percolation) prevents the use of standard soakage pits. Evaporation beds configured in three tiers can be used when confined by available land area.

5-37. Evaporation beds measure eight by ten feet. Construct sufficient beds to allow three square feet per person per day for kitchen waste and two square feet per person per day for wash and shower waste. Space the beds so that the waste can be distributed to any one of the beds. Scrape the top soil to the edges, forming a small dike around the bed. Spade the earth in the bed to a depth of 10 to 15 inches. Rake it into a series of rows with the ridges approximately six inches above the depression. Form the rows either lengthwise or crosswise, depending on which one allows for the best water distribution. Locate the beds outside the base camp and in an open, sunny area. Give careful attention to the proper rotation, maintenance, and dosage of the evaporation beds. If used properly, the beds create no insect problems and only a slight odor. Divide the total daily effluent by the application rate to determine the required acreage.

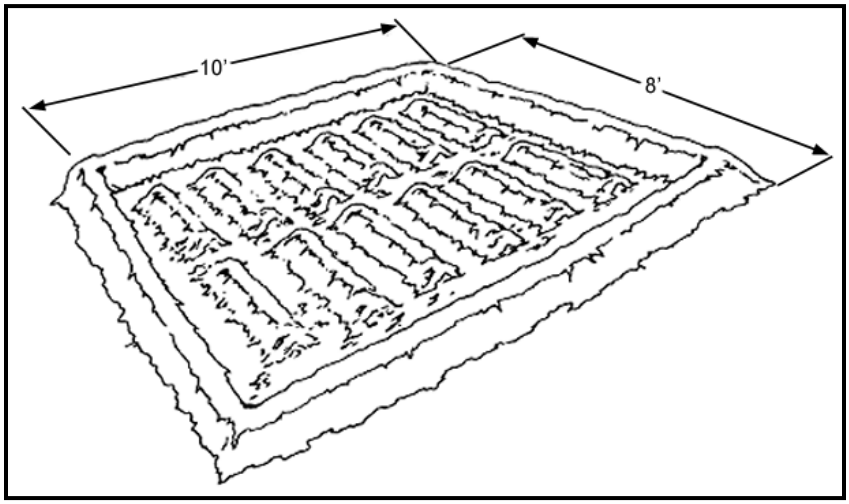

Figure 5-7. Evaporation bed

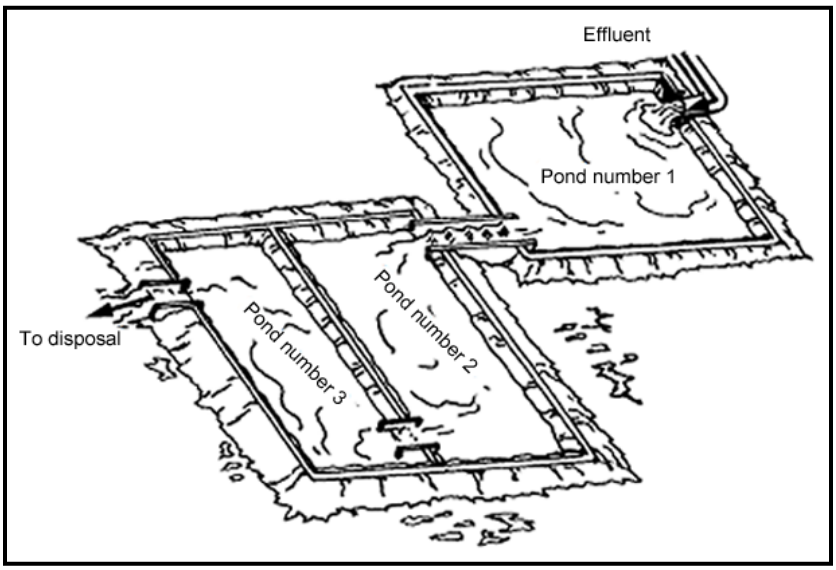

Figure 5-8. Three-tier evaporation beds

5-38. During the day, flood one bed with wastewater to the top of the ridges. This is equivalent to an average depth of three inches over the bed. Allow the wastewater to evaporate and percolate. After three or four days, the bed is usually sufficiently dry for respading and reforming. Flood the other beds on successive days and follow the same sequence of events. Give careful attention to proper rotation, maintenance, and dosage. It is essential that kitchen waste be run through an efficient grease trap before putting it in an evaporation bed. If used properly, evaporation beds will not create an insect hazard or emit strong odors.

SOAKAGE AREAS

5-39. Every device used for washing or drinking should have a soakage area. Soakage areas prevent pools and mud from forming. Excavate the area underneath and a few inches around handwashing devices, and wash racks. Fill the areas with small, smooth stones to form a soakage pit. Ensure that wastewater from wash racks is passed through an oil-water separator before it enters a soakage pit or trench. Each field shower only requires one soakage pit or trench.

DISPOSAL METHODS FOR BLACK WATER

5-40. It is imperative that human waste is disposed of quickly and effectively to prevent disease. A base camp without proper waste disposal methods in place can quickly become a breeding ground for mosquitoes, flies, rats, and other vermin which can quickly spread disease.

PLANNING CONSIDERATIONS

5-41. There are a number of factors which influence the establishment of latrine facilities. Compliance with local, state, federal, and host-nation laws pertaining to waste disposal techniques must always be considered. In situations where a unit must hastily occupy an area in which no infrastructure exists, construction and placement of improvised latrine facilities (where permitted by law) may be necessary. Depending on the sustainment support situation the unit may be able to have premade chemical and or containerized facilities brought in very quickly. Wherever latrines are placed, ditching must be conducted to prevent water from pooling around the facilities.

EMPLACEMENT CONSIDERATIONS

5-42. Considerations for the placement of latrines. Latrines must be—

- Located at least 300 feet downwind and downhill from unit food service facilities and at least 100 feet from any unit ground water source.
- Latrines are not dug to the ground water level or in places where pit contents may drain into the water source.
- Located upwind of burn pits and landfills.
- Lighted at night if the tactical situation permits, or staked off with rope or tape to serve as a guide.
- Built at least 100 feet from border of the unit billeting areas but within a reasonable distance for easy access for troops.
- A handwashing device is installed outside each latrine enclosure; these devices should be easy to operate and kept full of water.
- Dig a drainage ditch around the edges of the latrine to keep out rainwater and other surface water.

Note. Chemical and containerized latrines must be placed so that service vehicles can access them for waste removal and cleaning.

5-43. For planning purposes, the number of latrines should be based on one toilet and urinal per 25 male Soldiers (four percent), or one toilet per 17 female Soldiers (six percent).

SANITATION AND MAINTENANCE

5-44. The unit field sanitation teams are responsible for the daily inspections and supervision of the maintenance of all latrine facilities. Actual maintenance and cleaning of the facilities is to be conducted by detailed Soldiers within the unit. It is critical that these facilities be cleaned daily to avoid attracting arthropods which can spread disease. Latrine facilities must be cleaned, using antibacterial soap and water or a disinfectant. To prevent flies and other arthropods from becoming a problem, perform a pest/insect survey to determine that a pest problem actually exists in latrine facilities. After applying physical controls (screening, sanitation) the use of an appropriate residual pesticide may be applied according to the label or use of fly-trap bags or fly bait may be used for control. Do not spray the pit contents.

5-45. Insecticides should not be sprayed inside latrine pits, garbage dumps, or grease pits to kill fly larvae. Spraying these larval habitats not only hastens resistance to pesticides, but also kills the larvae of beneficial insects which prey on filth fly larvae. Properly constructed and maintained waste disposal sites will prevent development of filth flies.

Note. The use of insecticides must be in compliance with the manufacturer's directions to avoid potential harm to Soldiers.

Handwashing Stations

5-46. Soldiers must be educated on the critical importance of proper handwashing procedures by their unit field sanitation teams to reduce the threat of disease. A simple handwashing device should be installed outside each latrine enclosure. The device should be easy to operate and have a constant supply of water- or alcohol-based hand sanitizer. The importance of handwashing devices must be emphasized and enforced throughout the unit. A soakage pit must be placed underneath the handwashing station to help keep the surrounding area from collecting and forming pools. (See figures 5-9 and 5-10 on page 5-12.)

Figure 5-9. Field wash stand

Figure 5-10. Improvised handwashing facility

Safety

5-47. Safety aspects should be considered when planning for the use of field latrines. Ensure latrines are accessible both night and day. Also, when conducting maintenance procedures or the burning of waste for burn-out latrines, use the appropriate individual protective equipment. Preventive medicine personnel should be consulted on the particular safety aspects of the method used. For burn-out latrines, highly volatile fuels such as jet propulsion fuel (JP4) should not be used because of its explosive nature.

LATRINES

5-48. There are essentially four types of latrine systems that can be employed to meet the requirements of Soldiers in the field. These types of latrines are—

- Portable/disposable latrine systems are especially useful for Soldiers who are mobile, or will only be in place for very short periods of time.
- Chemical latrine systems are prefabricated latrines that are placed and serviced under contract from a trusted vendor.
- Containerized latrine systems are a prefabricated component part of the Force Provider system.
- Improvised latrine systems are latrines that are dug and/or constructed from readily available materials by the Soldiers who will use them. These systems are generally used when Soldiers are mobile or when they are just establishing a new base of operations.

PORTABLE LATRINES

5-49. Portable latrine systems enable Soldiers to relieve themselves in highly mobile and fluid environments by providing a rapidly accessible, clean, and private environment for both men and women (see figure 5-11). These systems can easily be carried on vehicles and quickly set up by untrained personnel. These systems have long shelf lives and require no external support. The collection bags can be conveniently disposed of along with proper trash, meeting all federal, state and provincial requirements.

Figure 5-11. Portable latrine systems

CHEMICAL LATRINES

5-50. Chemical latrines are the preferred means for disposal of human waste during field training exercises (see figure 5-12). Logistics personnel can help facilitate the acquisition of chemical latrines and ensure maintenance and upkeep is dictated in the contract. It is essential these latrines are cleaned daily and the contents are pumped out for disposal in an Army-approved wastewater system (ideally, a sanitary sewer). The frequency of emptying is determined by the demand for use of the device. During contingency operations, engineer personnel may construct and operate a sewage lagoon for disposal of chemical latrine waste.

Figure 5-12. Chemical latrines

CONTAINERIZED LATRINES

5-51. The containerized latrine system, normally a component of Force Provider units, consists of six privacy stalls with low-water flush toilets, a trough urinal, two waste collection tanks (urinal and toilet waste are stored in separate tanks), two sinks with running hot and cold water, a six-gallon water heater, mirrors, and dispensers for toilet paper, paper towels and soap (see figure 5-13 on page 5-14). An environmental control unit installed in the rear wall regulates internal temperature, and ventilation systems

installed in the front wall and ceiling reduce odor. The containerized latrine system provides a private latrine facility with increased sanitation for 150 Soldiers. Containerized latrines are the preferred means of human waste disposal during contingency operations.

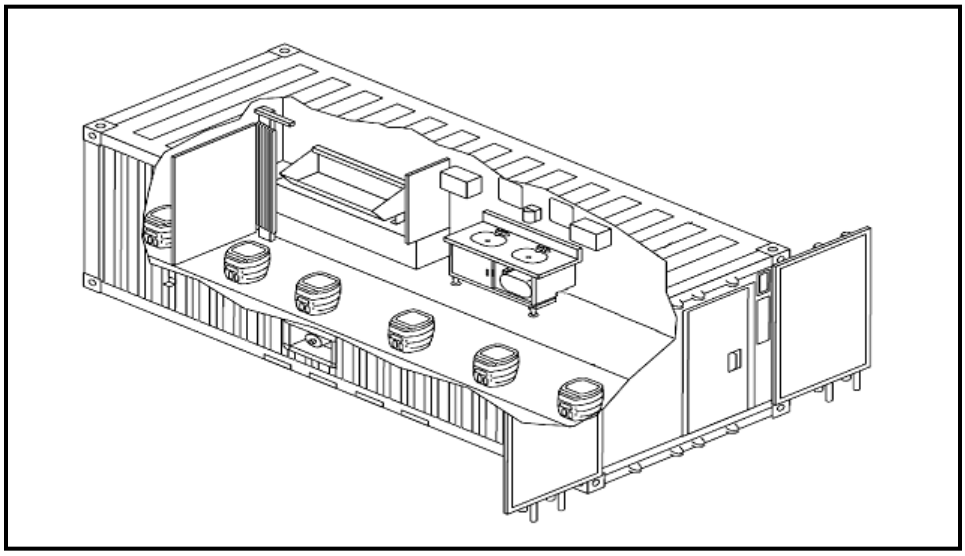

Figure 5-13. Containerized latrine subsystem

IMPROVISED LATRINES

5-52. The types of improvised latrines listed below can be used for field use. Generally, the use of improvised latrines in the United States is prohibited.

Cat-Hole Latrine

5-53. The cat-hole latrine is used when the unit is on the move (see figure 5-14). The cat-hole latrine is simply a hole approximately one foot deep and one foot in diameter. After using a cat hole it must be completely filled in and the dirt packed down.

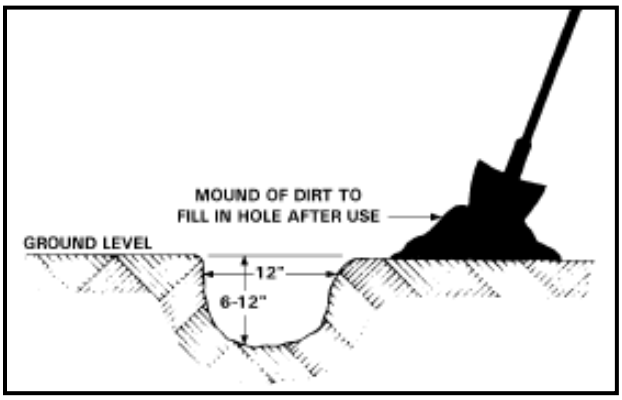

Figure 5-14. Cat-hole latrine

Straddle Trench Latrine

5-54. The straddle trench latrine is used if the unit remains in one place for up to three days (see figure 5-15). Each trench is dug one foot wide, two and one half feet deep, and at least four feet long. Multiple trenches should be dug at least two feet apart. Each four-foot trench will accommodate two Soldiers. Separate facilities should be constructed for male and female Soldiers. Placing boards along both sides of the trench can provide better footing. Place toilet paper on broken sticks, branches or tent pole/stake and cover the rolls with a can to protect the paper in bad weather. Pile the excavated dirt at one end of the latrine and provide a shovel for the Soldier to cover the excrement and toilet paper after each use. Close the latrine when the trench is filled to within one foot of the top.

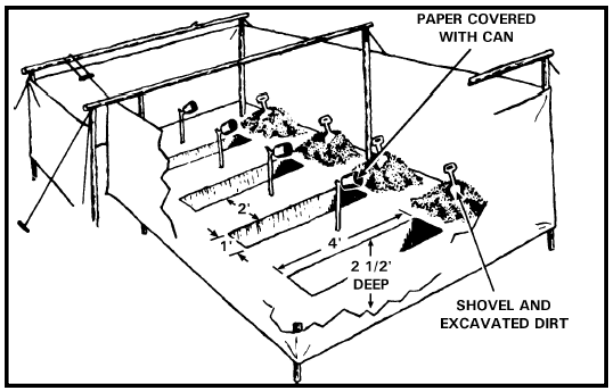

Figure 5-15. Straddle trench latrine

Mound Latrines

5-55. The mound latrine is utilized when the water table in an area is high or area rock formation near the surface prevents digging a deep pit (see figure 5-16). A mound of earth with a top at least 6-feet wide and 12-feet long is formed and a four-seat latrine box is placed on top. The mound is formed in 1-foot layers and allows 1 foot from the base of the pit to ground level. The pit is dug into the mound when the mound has reached its desired level.

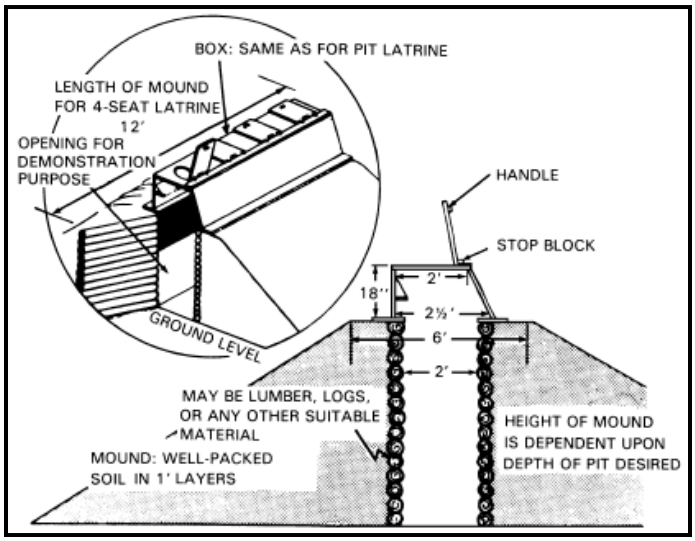

Figure 5-16. Mound latrine

Deep Pit Latrines

5-56. The deep pit latrine is used if a unit will remain in one place longer than three days (see figure 5-17). This latrine uses a two or four seat box either issued to, or built by, the unit using. The two-seat box is four feet long, two and one half feet wide at the base, and 16 inches high. The four-seat box is eight feet long. To minimize flies entering the latrine, pack the dirt tightly around the base of the box. Lids that are fly-proof and self-closing should cover the seat holes. A metal urine deflector strip is placed inside the front of the box to prevent urine from soaking into the wood. The pit for the latrine is dug two feet wide and either three and one half or seven and one half feet long. The depth of the pit should equal one foot for each week the latrine will be used, plus one foot for the dirt cover when the latrine is closed.

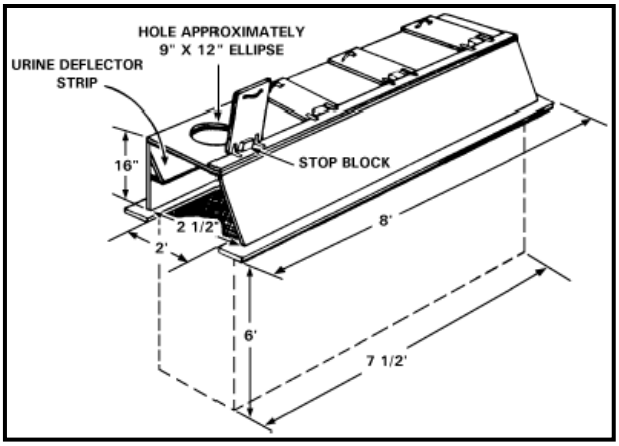

Figure 5-17. Deep pit latrine

Bored-Hole Latrine

5-57. The bored-hole latrine consists of a hole that is about 10 inches in diameter and 15 to 20 feet deep that can be quickly emplaced with heavy equipment that has an auger attachment (see figure 5-18). The actual diameter of the hole is not critical and should be based on the largest size of auger that is available. The hole is covered by a one-hole latrine box using a metal drum with both ends removed that is sunk into the ground with a fly-proof seat cover and lid that fits the top of the drum. If a drum is not available, construct a fly proof, wooden box that is 18 inches high.

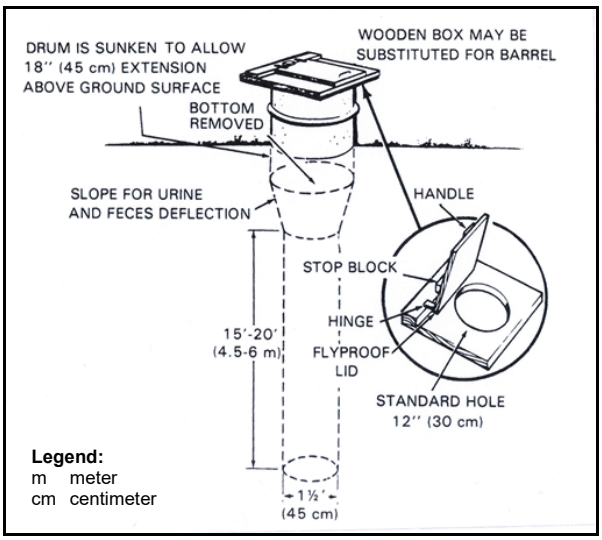

Figure 5-18. Bored-hole latrine

CLOSING LATRINES

5-58. When a trench or pit latrine has been filled to within one foot of the surface, or when it is to be abandoned, it must be closed (see figure 5-19). The contents of the pit, the side walls, and the ground surface (to a distance of two feet from the side walls) should be sprayed with an approved insecticide. The pit is then filled to ground level with successive, three inch layers of earth. Each layer is packed down and its surface is sprayed with a Department of Defense-approved insecticide before the next layer is added. The latrine pit is then mounded over with at least one foot of compacted earth. The purpose of this method of closing is to prevent emergence of flies that may hatch in the closed latrine. The location of the latrine should then be plainly marked with a *CLOSED LATRINE* sign and dated, provided the tactical situation permits.

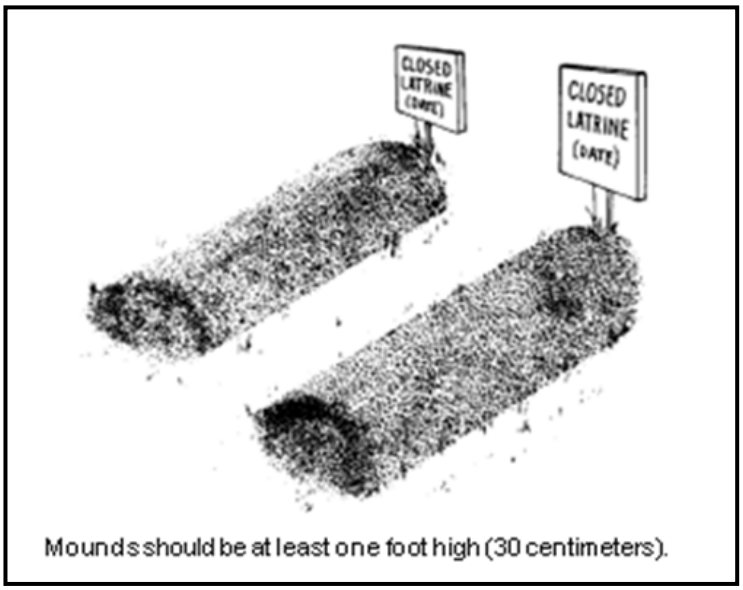

Figure 5-19. Properly closed latrines

Pail Latrines

5-59. The pail latrine is used in areas where the ground is rocky, you are in a populated area, or the water table is too close to the surface of the ground for digging a deep pit latrine (see figure 5-20 on page 5-18). The same seat boxes constructed for a deep pit latrine can be modified for use as a pail latrine by placing hinged doors on the rear of the box, adding a floor and placing a pail under each seat. If the pail latrine is located in a building, the box should be placed to form part of an outer wall. The box should be placed on a floor of impervious material, such as concrete, that slopes toward the rear. The slope allows wash water to drain rapidly. If possible, line the pails with plastic to reduce the risk of accidental spillage. Pails should be cleaned at least once daily; more often, if necessary. Dispose of the contents by burial, burning, or other sanitary measures. When pails are replaced after having been cleaned, they should contain 1 inch of disinfectant.

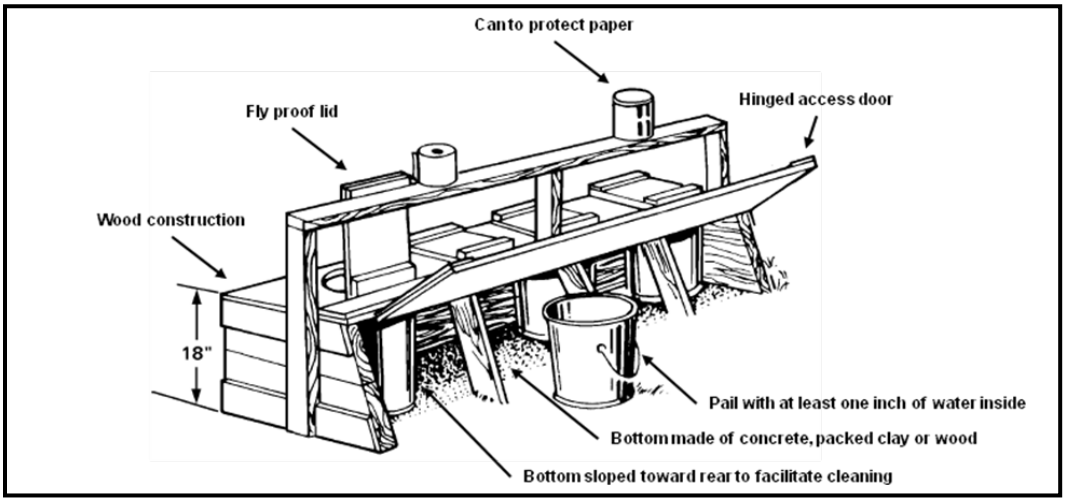

Figure 5-20. Pail latrine

Burn-Out Latrines

5-60. The burn-out latrine is particularly well suited for use in jungle areas with less than ideal soil conditions like high water tables, but can also be used when the ground is hard or rocky and digging is difficult or impossible (see figures 5-21 and 5-22). Do not use it in areas in which the air pollution regulations prohibit open fires.

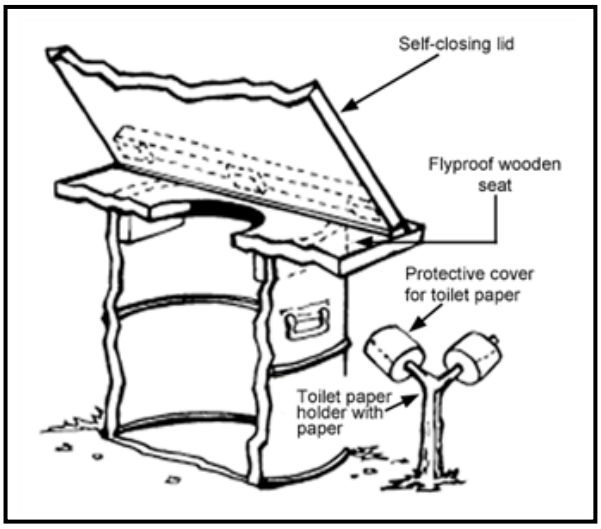

Figure 5-21. Single seat open-air burn-out latrine

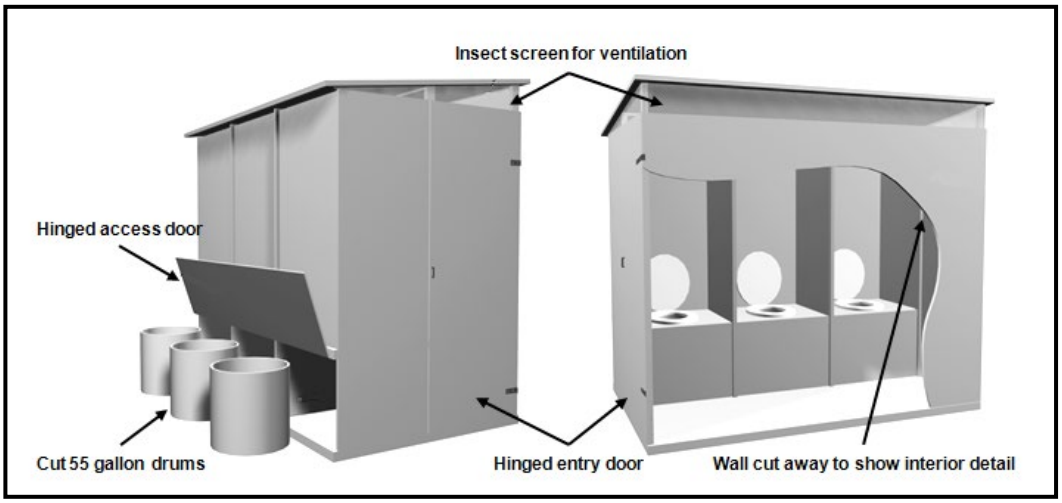

Figure 5-22. Multiple seat enclosed burn-out latrine

5-61. The latrine must be burned out every 18 to 24 hours or when the latrine is one-half full. The use of jet propulsion fuel (JP8) is effective for incinerating the waste in the barrels but, must be used with caution. This procedure is repeated until only a residue of ash remains. This ash contains no harmful organisms, and may be disposed of by burying, or in some other sanitary manner.

5-62. For safety reasons, never add additional fuel while the barrel is actively burning. Fire extinguishers (operational), piles of dirt (with shovels) must be on hand for fire suppression. Figure 5-23 on page 5-20 depicts the proper method for igniting fuel in a burn-out latrine.

DANGER

Failure to properly ignite the fuel mixture in a burn-out latrine may result in severe burns and death. For safety reasons, never add additional fuel while the barrel is actively burning.

5-63. To construct a burn-out latrine, a 55-gallon drum is cut in half and handles are welded to the sides of the half drum for easy carrying. A wooden seat with a fly proof, self-closing lid is placed on top of the drum. To prevent dilution of the waste, build urinals for men and create separate urinal barrels for women.

5-64. Two sets of drums should be available for each burn-out latrine so that one set is in place in the latrine while the other set is being burned clean. If the contents are not rendered dry and odorless by one burning, they should be burned again. Any remaining ash should be buried.

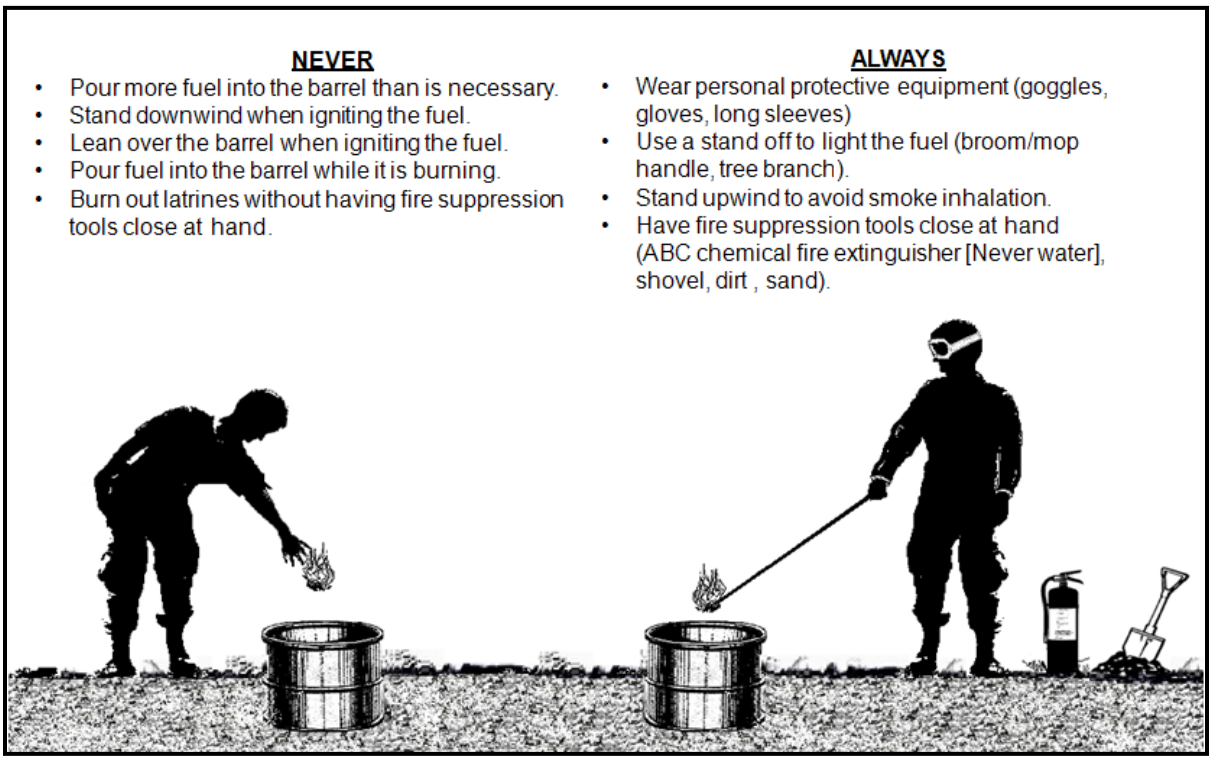

Figure 5-23. Proper method for igniting fuel in a burn-out latrine

URINE DISPOSAL FACILITIES

5-65. There are a number of urine disposal facilities available for Soldiers to relieve themselves during convoys or other continuous operations that restrict the places and time allowed for urination, many female Soldiers limit their consumption of liquids. In this effort to decrease their need to urinate, Soldiers dehydrate themselves, sometimes to a dangerous degree. Females must be allowed enough time to urinate on a regular basis, especially since they have to remove much of their gear and require more time than men.

DISPOSABLE URINE COLLECTION DEVICES

5-66. Commercial off-the-shelf urine collection and disposal devices come in several forms. Some are designed exclusively for female Soldiers. These devices are referred to as female urinary devices. Female urinary devices do not incorporate a collection system but do make it easier for females to relieve themselves in difficult situations without having to remove all of their equipment. The device allows females to urinate through the fly of the uniform while still standing requiring only a privacy screen.

5-67. One device in particular has the advantage of being designed for use by both male and female Soldiers. Additionally the unit consists of an anatomical opening and a durable vinyl catch bag with which contains an absorbent material. When used, the liquids instantly solidify into a leak proof, odorless, spill proof gel that is nontoxic and safe for disposal in any waste bin. The only other requirement is a privacy screen.

MANUFACTURED URINE DISPOSAL DEVICES

5-68. Manufactured urine disposal devices include chemical toilets and Force Provider latrine systems as discussed in paragraphs 5-50 and 5-51.

IMPROVISED URINALS

5-69. Improvised urine disposal facilities may be necessary when a unit moves into an area that currently has no existing infrastructure or insufficient infrastructure to support the number of Soldiers now occupying the area.

Urine Soakage Pit

5-70. The best improvised device for urine disposal in the field is a urine soakage pit (see figure 5-24). The pit is dug four feet square and four feet deep and filled with an aggregate material. A border is placed along each edge so that each side of the soakage pits surface is five feet long. The border should be six inches wide, four inches deep, and composed of small stones. Depending on available materials, use either pipe urinals or trough urinals with this pit. For the urine soakage pit to function properly, Soldiers must not be allowed to urinate on the surface of the pit. An optional feature is the ventilating shafts with screened openings that extend from about eight inches above the pit to within six inches of the bottom of the pit. The funnels or trough must be cleaned daily with soap and water and the funnels replaced as necessary. Oil and grease must never be poured into the pit, as they will clog it. When a urine soakage pit is to be abandoned or it becomes clogged, it is sprayed with a residual insecticide and mounded over with a two-foot covering of compacted earth.

Pipe Urinals

5-71. Pipe urinals (see figure 5-24) should be at least one inch in diameter and approximately 36 inches long and placed at each corner of the soakage pit and, if needed, on the sides halfway between the corners. The pipes are inserted at least 8 inches below the surface of the pit. A funnel of tar paper, sheet metal, or similar material is placed in the top of each pipe and covered with a screen. The upper rim of the funnel should extend about 30 inches above the ground surface.

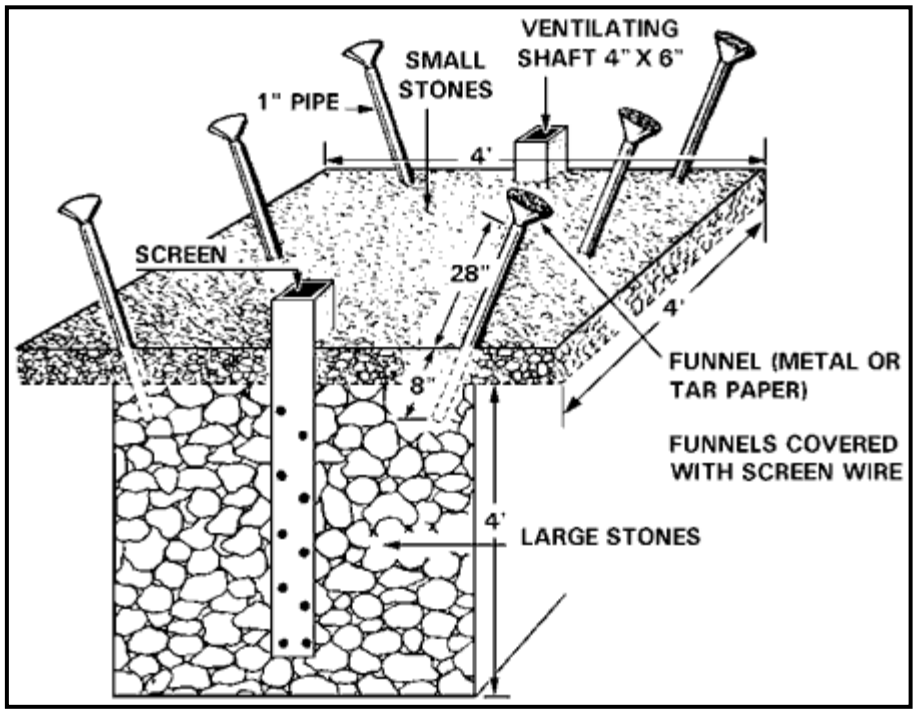

Figure 5-24. Urine soakage pit with pipe urinals

Trough Urinal

5-72. A trough urinal (see figure 5-25) is used when a more permanent facility is required and the necessary materials are available. The U- or V-shaped trough is about ten feet long and made of sheet metal or wood. If wood is used, it must be lined with heavy tar paper. The legs supporting the trough are cut slightly shorter on one end where a pipe carries the urine into the soakage pit or latrine pit.

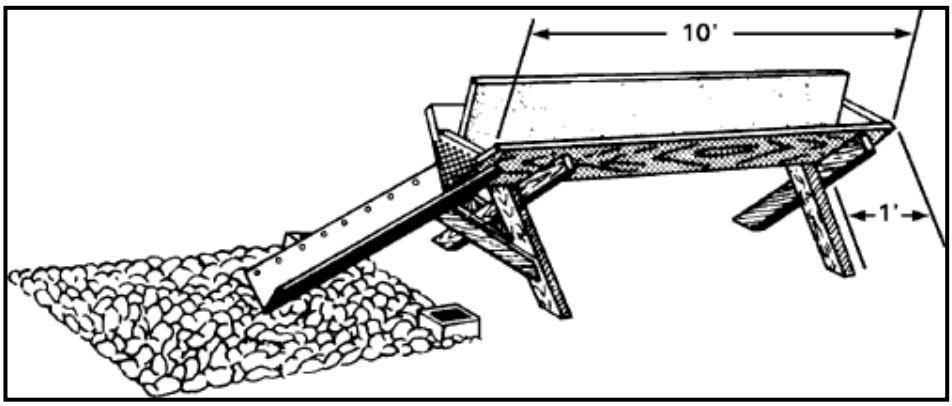

Figure 5-25. Trough urinal

Urinoil

5-73. In areas where the ground water level is more than 3 feet below the surface, the urinoil (see figure 5-26) is an acceptable substitute for other types of urine disposal facilities. The urinoil is a 55-gallon drum containing oil that is placed over a recessed soakage pit. Waste oil can be used, but vegetable oil is preferred. Urine voided through the screen immediately sinks through the oil where it is trapped at the bottom of the drum. As urine is added, the level rises within the three inch diameter pipe. This continues until it reaches the one and one half inch notch on the overflow pipe in the center of the drum. The oil acts as an effective seal against odors and flies. The screen is easily lifted with attached hooks for removal of debris. The urinoil will operate in place as long as the soakage pit will accept the urine.

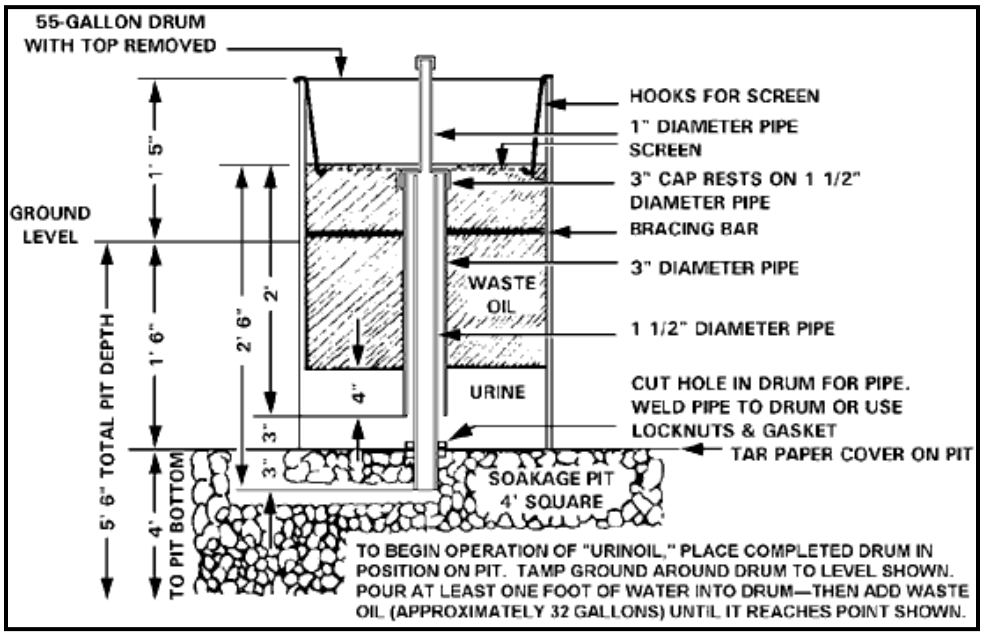

Figure 5-26. Urinoil

Chapter 6

Pest Management

GENERAL

6-1. Pests are defined by the Department of Defense as arthropods, birds, rodents, nematodes, fungi, bacteria, viruses, algae, snails, marine borers, snakes, weeds, and other organisms (except for human or animal disease-causing organisms) that adversely affect readiness, military operations, or the well-being of personnel and animals; attack or damage real property, supplies, equipment, or vegetation; or are otherwise undesirable. For more information refer to Department of Defense Instruction 4150.07 and Armed Forces Pest Management Board's Technical Guide Number 36.

6-2. Pest management is the prevention and control of disease vectors and pests that may adversely affect the Department of Defense mission or military operations; the health and well-being of people; or structures, materiel, or property.

6-3. Pests that Soldiers most commonly come in contact with in the field and those which the unit field sanitation teams are specifically trained to deal with are rodents and stinging and biting arthropods discussed in greater detail in this chapter.

SECTION I — MAMMALS

RODENTS

6-4. Rodents are an order of mammals characterized by two continuously growing incisors (teeth) in the upper and lower jaws which must be kept short by gnawing. Common rodents include mice, rats, squirrels, chipmunks, gophers, porcupines, beavers, hamsters, gerbils, guinea pigs, chinchillas and many others. They are worldwide in distribution and are found in almost every terrestrial and freshwater habitat, from the shores of the Arctic Ocean to the hottest deserts. The great majority are under a few inches in length; the largest, the capybara, is about four feet (120 centimeters) long and 20 inches (50 centimeters) high at the shoulder.

6-5. Worldwide, rats and mice are known to spread over 35 diseases. Rodentborne diseases are spread directly to humans through bite wounds; consuming food or water that is contaminated with rodent droppings; coming in contact with surface water contaminated with rodent urine; or through breathing in germs that may be present in rodent urine or droppings that have been stirred into the air (a process known as *aerosolization*). Diseases from rodents are also spread indirectly to humans by way of ticks, mites, and fleas that transmit the infection to humans after feeding on infected rodents. In some cases, the rodents are the reservoirs (carriers) of the diseases, while in other cases the ticks, mites, or fleas act as the disease reservoirs. For more information refer to the Armed Forces Pest Management Board's, Technical Guide Number 41.

6-6. Table 6-1 on page 6-2 lists many of the diseases associated with rodents around the world. These lists are intended only to highlight the risks associated with rodents in areas where United States forces are located or may be deployed. More information on rodentborne or rodent associated diseases should be sought by unit medical personnel and field sanitation team members prior to movement into a given area of operations.

Table 6-1. Diseases associated with rodents

Disease	*Carrier*	*Transmission*	*Region*
Group C Virus Disease Apeu, Caraparu, Itaqui, Madrid, Marituba, Marutucu, Nepuyo, Oriboca, Ossa, Restan	Rodents.	Bite of infective mosquito.	Tropical South America, Panama, and Trinidad.
Omsk Hemorrhagic Fever	Rodents.	Bite of infective ticks.	Forest steppe region of Siberia, within the Omsk, Novosibirsk, Kurgan and Tjumen regions.
Kyasanur Forest Disease	Rodents, shrews and monkeys.	Bite of infective ticks.	Kyasanur Forest of the Shimoga and Kanara Districts of Karnataka, India.
Babesiosis	Rodents.	Bite of nymphal ticks that have fed on infected rodents.	United States–Northeast, Wisconsin, California, Washington, and Mexico. (Lesser known but related *Babesia* spp. occur in Europe, Asia, and Africa.)
Capillariasis	Rodents.	Ingestion of embryonated eggs in soil.	North and South America, Turkey, Switzerland, Czechoslovakia, Yugoslavia, Italy, Africa, Hawaii, India, Japan, and Korea.
Clonorchiasis	Rats.	Eating raw or undercooked freshwater fish containing encysted larvae.	China, Japan, Taiwan, Korea, Vietnam, principally in the Mekong River delta.
Lassa Fever	Wild rodents.	Aerosol or direct contact with excreta of infected rodents.	Sierra Leone, Liberia, Guinea and parts of Nigeria.

Table 6-1. Diseases associated with rodents (continued)

Disease	*Carrier*	*Transmission*	*Region*
Leishmaniasis	Wild rodents.	Bite of infective sand flies.	The Middle East, former Soviet Union, Mediterranean littoral, Pakistan, India, China, Sub-Saharan Savanna, Sudan, Ethiopia, Kenya, Namibia, South-Central Texas, Mexico, all of Central America, all of South America except Chile and Uruguay.
Lyme Disease	Wild rodents.	Bite of infected ticks.	Eastern United States, Wisconsin and Minnesota, the West Coast, and Canada. Also in Europe, the former Soviet Union, China, and Japan.
Plague	Wild rodents, especially ground squirrels. Commensal rodents will also support outbreaks of plague in urban areas.	Bite of infected fleas (other routes of transmission uncommon or rare).	Worldwide, maintained between outbreaks in sylvatic cycles of wild rodents and their fleas (primarily in semi-arid regions).
Rat-Bite Fever	Infected rats, rarely in squirrels, weasels, and gerbils.	Transmitted by urine or secretions of the mouth, nose or conjunctival sac of infected rodents, most often through biting.	Worldwide, but uncommon in North and South America and most European countries.
Relapsing Fever	Wild rodents.	Bite or coxal fluids of infected ticks in the United States, Central and South America, Africa, and in the Near and Middle East.	Tropical and central Africa, Spain, Saudi Arabia, Iran, India, parts of central Asia, and North and South America.
Schistosomiasis	Rodents are potential hosts, appears to be a rodent parasite that can infect humans.	Infection from water that contains free-swimming larval forms (cercariae) that have developed in snails.	China, Taiwan, the Philippines, and Sulawesi.

Table 6-1. Diseases associated with rodents (continued)

Disease	*Carrier*	*Transmission*	*Region*
Murine Typhus Fever	Rats, mice, and other small mammals.	Infective rat fleas defecate rickettsiae while sucking blood, contaminating the bite site and other fresh skin wounds.	Worldwide–found in areas where people and rats occupy the same buildings and where large numbers of mice live.
Q Fever	Many species of rodents.	Airborne dissemination of rickettsiae in dust from premises contaminated by placental tissues, birth fluids, and excreta of infected animals.	Worldwide.
Sabia (Brazilian) Hemorrhagic Fever	Reservoir is unknown, although rodents are suspected.	Inhalation of small particle aerosols derived directly from virus-contaminated rodent excreta and saliva. May be spread by secondary aerosols from farming, by ingestion, or by contact with cuts or abrasions.	Brazil.
Junin (Argentinian) Hemorrhagic Fever	Wild rodents, primarily Calomys musculinus.	Same as above.	Argentina.
Machupo (Bolivian) Hemorrhagic Fever	The Large Vesper Mouse.	Same as above.	Bolivia.
Guanarito (Venezuelan) Hemorrhagic Fever	Cane rats and cotton rats are the reservoirs.	Same as above.	Venezuela.
Colorado Tick Fever	Ground squirrels, chipmunks, and deer mice.	Bite of infective tick.	Mountainous regions above 5000 feet in the western United States and Canada.
Far Eastern Tickborne Encephalitis, Central European Tickborne Encephalitis, and Powassan Virus Encephalitis	Wild rodents and other animals serve as reservoirs.	Bite of an infective tick.	Far eastern region of the former Soviet Union, Europe, Canada and the United States.

Table 6-1. Diseases associated with rodents (continued)

Disease	*Carrier*	*Transmission*	*Region*
Leptospirosis	Wild rodents, particularly rats.	Contact of skin or mucous membranes with water, soil or vegetation contaminated with urine of infected animals; ingestion of food contaminated with urine from infected rats.	Worldwide in urban and rural areas except for polar regions.
Lymphocytic Choriomeningitis	House mouse.	Oral or respiratory contact with virus-contaminated excreta, food or dust; virus shed in mouse urine, saliva, and feces.	Americas and Europe.
Salmonellosis	Wild rodents.	Ingestion of food contaminated by feces of infected animal.	Worldwide.
American Trypanosomiasis	Wild animals, including rats and mice.	Contamination of abrasions, conjunctiva, skin wounds or mucous membranes (including bite site) following bite of infected vector.	Western Hemisphere, especially Mexico, Central, and South America.
Cryptosporidiosis	Guinea pigs, mice, rats, and rabbits.	Ingestion of infective sporulated oocysts.	Worldwide.
Tularemia	Wild rodents: voles, muskrats, beaver; also lagomorphs (rabbits, hares).	Bite of infected arthropods, including ticks, deer flies, and the mosquito Aedes cinereus in Sweden.	North America, Europe, former Soviet Union, China, Japan, and Mexico.
Yersiniosis	Rodents serve as reservoirs for Yersinia pseudotuberculosis.	Fecal-oral transmission by eating or drinking contaminated food and water or by direct contact with infected animals.	Worldwide; Y. pseudotuberculosis is primarily a zoonotic disease with humans as incidental hosts.
Rickettsialpox	House mouse.	Transmitted by bite of infected mites.	Eastern United States, particularly New York, and the former Soviet Union.
Giardiasis	Rodents and other animals.	Ingestion of cysts in contaminated water as well as fecal-oral contamination.	Worldwide.

Table 6-1. Diseases associated with rodents (continued)

Disease	*Carrier*	*Transmission*	*Region*
Pasteurellosis	Mice and rabbits.	Infection in man is rare, but may be caused by the bite of infected rodents.	Worldwide.
Toxoplasmosis	Rodents serve as intermediate hosts, with cats and other felines as definitive hosts.	Ingestion of sporulated oocysts from cat feces and eating undercooked meat containing tissue cysts.	Worldwide.
Scrub Typhus	Mites supported by rodents.	Bite of infected chigger mite larvae.	East and Southeast Asia, North Australia.
Rocky Mountain Spotted Fever	Ticks carried and supported by rodents.	Bite of infected ticks; in the United States and in Latin America.	United States, Canada, Mexico, Panama, Costa Rica, Colombia, and Brazil.
Boutonneuse Fever	Ticks carried and supported by rodents.	Bite of infected ticks.	Africa, Europe, Middle Ease, Mediterranean, South Africa, and Southeast Asia.
North Asian Tick Fever	Ticks carried and supported by rodents.	Bite of infected ticks.	Asiatic areas of the former Soviet Union, China, and Mongolia.
Queensland Tick Fever	Ticks carried and supported by rodents.	Bite of infected ticks.	Queensland and New South Wales, Australia.
Hymenolepiasis	Mice and rats.	Ingestion of eggs or infected intermediate hosts (insects) or by fecal-oral contamination.	Africa, South America, the Caribbean, Italy, Japan, United States, the former Soviet Union.
Trichinellosis	Rats and many wild animals (mammals).	Eating undercooked or raw meat containing encysted larvae.	Worldwide.
Hemorrhagic fever with renal syndrome. Hantavirus pulmonary syndrome.	Wild rodents are the primary reservoir hosts of the recognized hantaviruses. Each hantavirus appears to have a preferred rodent host, but other small mammals can be infected as well.	Inhalation of aerosolized infective saliva or excreta. May also occur when fresh or dried materials contaminated by rodent excreta are disturbed, introduced into broken skin or the eyes, or, possibly, ingested in contaminated food or water. Persons have also become infected after being bitten by rodents.	Worldwide.

COMMONLY ENCOUNTERED RODENTS

6-7. The rodents most commonly encountered by Soldiers and pose the greatest health threat to Soldiers in the field are the—

- Norway (*Rattus norvegicus*).
- Roof rat (*Rattus, rattus*).
- House mouse (*Mus musculus*).

NORWAY RAT (*RATTUS NORVEGICUS*)

6-8. The Norway rat is a stocky burrowing rodent introduced into North America by settlers from Europe. Also called the brown rat, house rat, barn rat, sewer rat, gray rat, or wharf rat, it is a slightly larger animal than the roof rat. Adult Norway rats weigh an average of one pound. Their fur is coarse and usually brownish or reddish gray above and whitish gray on the belly. See figure 6-1.

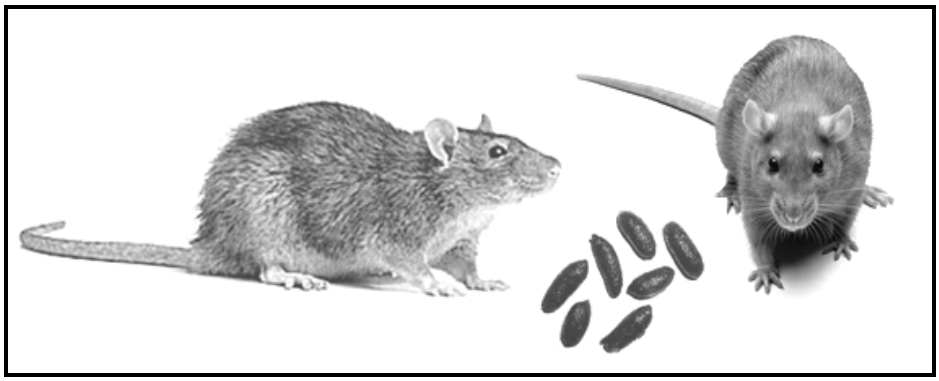

Figure 6-1. Norway rat, *Rattus norvegicus*

Habitat

6-9. Norway rats live in close association with people. In urban or suburban areas they live in and around residences, in cellars, warehouses, stores, slaughterhouses, docks, and in sewers. On farms they may inhabit barns, granaries, livestock buildings, silos, and kennels. They may burrow to make nests under buildings and other structures, beneath concrete slabs, along stream banks, around ponds, in garbage dumps, and at other locations where suitable food, water, and shelter are present. Although they can climb, Norway rats tend to inhabit the lower floors of multistory buildings.

Rat Sign

6-10. There are a number of observable signs which would indicate the presence of Norway rats living in proximity to Soldiers. These signs include—

- Droppings that are generally one quarter to one half inch in length, capsule shaped, with blunt ends. They are usually a shiny black, but may vary according to diet.
- Urine, (wet or dry) will fluoresce under ultraviolet light. Urine stains usually occur along travel ways or in feeding areas.
- Tracks, including footprints or tail marks, may be seen on dusty surfaces or in mud.
- Runs or burrows may be found next to walls, along fences, next to buildings, or under bushes and debris. Rats memorize pathways and use the same routes habitually.
- Smudge marks (rub marks) on structural beams, rafters, pipes, and walls are a result of oil and dirt rubbing off the rat's fur along frequently traveled routes.
- Gnawing may be visible on doors, ledges, in corners, in wall material, on stored materials, or other surfaces wherever rats are present. Fresh accumulations of wood shavings, insulation, and

other gnawed material are indicate active infestations. Sounds such as gnawing, climbing within walls, clawing, various squeaks, and fighting are common where rats are present.

Diet

6-11. Norway rats will eat nearly any type of food. Due to its close contact with man, the Norway rat has developed an affinity for man's food; therefore they prefer cereal grains, meats and fish, nuts, and some types of fruit. Rats require up to one ounce of water daily when feeding on dry foods but need less when moist foods are available. Food items in household garbage offer a fairly balanced diet and can satisfy their moisture needs.

Physical Characteristics

6-12. The physical characteristics of the Norway rat are as follows:

- Tail is shorter than the head and body.
- Body is thick with a blunt nose.
- Adult rat weights approximately 16 ounces.
- Eyes and ears are small.
- Droppings are about three quarters of an inch long with blunt ends.

Habits and Biology

6-13. Norway rats are primarily nocturnal, becoming active about dusk, when they begin to forage for food and water. When rat populations are high, some may be active during daylight hours.

6-14. Norway rats have poor eyesight, relying more on their senses of hearing, smell, taste, and touch to locate food items and to recognize other rats. Their sense of taste is excellent, and they can detect some contaminants in their food at levels as low as 0.5 parts per million.

6-15. Norway rats normally travel an area averaging 100 to 150 feet in diameter. They seldom travel farther than 300 feet from their burrows to obtain food or water. Rats constantly explore and learn about their environment, memorizing the locations of pathways, obstacles, food and water, shelter, and other elements in their domain. They quickly detect and tend to avoid new objects placed into a familiar environment. Thus, objects such as traps and bait stations often are avoided for several days or more following their initial placement.

6-16. Norway rats usually construct nests in below-ground burrows or at ground level. Nests may be lined with shredded paper, cloth, or other fibrous material. Litters of six to twelve young are born 21 to 23 days after conception. Newborn rats are hairless and their eyes are closed, but they grow rapidly. They can eat solid food at two and one half to three weeks. They become completely independent at about three to four weeks and reach reproductive maturity at three months of age. Females may come into heat every four or five days, and they may mate within a day or two after a litter is born. Breeding often peaks in spring and fall, with reproductive activity declining during the heat of summer and often stopping completely in winter, depending on habitat. These seasonal trends are most pronounced in more severe climates. The average female rat has four to six litters per year and may successfully wean 20 or more offspring annually. Norway rats have physical capabilities that enable them to gain entry to structures by gnawing, climbing, jumping, and swimming.

ROOF RAT (*RATTUS RATTUS*)

6-17. The roof rat is smaller and more slender than the larger Norway rat. Adult roof rats generally weigh about five to nine ounces and are seven to ten inches long. The tail is longer than the head and body combined. They have large ears and a pointed nose. The fur is smooth, as opposed to the Norway rat with its shaggy fur. The roof rat has a long history as a carrier of plague. See figure 6-2.

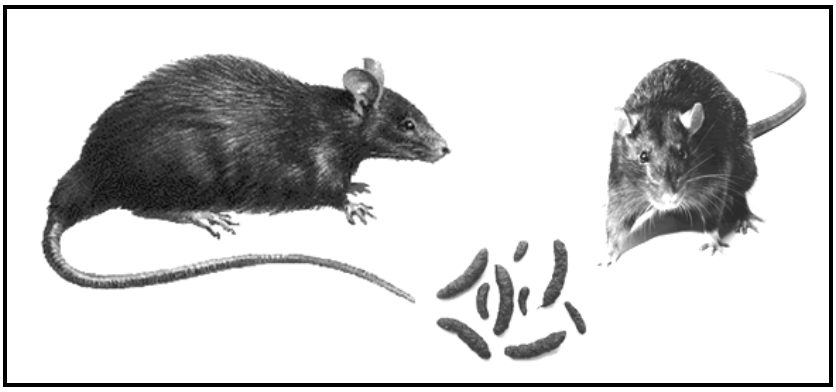

Figure 6-2. Roof rat, *Rattus rattus*

Habitat

6-18. Roof rats often live in trees or on vine-covered fences. Landscaped residential or industrial areas, vegetation of riverbanks and streams. Parks with natural and artificial ponds or reservoirs may also be infested. Roof rats will often move into sugarcane and citrus groves. They are sometimes found living in rice fields or around poultry or other farm buildings as well as in industrial sites where food and shelter are available.

6-19. Roof rats prefer to nest in locations off of the ground and rarely dig burrows for living quarters if off-the-ground sites exist. The nature of damage to outdoor vegetation can often provide clues as to whether it is caused by the roof or Norway rat. Other rat signs may also exist, but be aware that both species may be present. Setting a trap to collect a few specimens may be the only sure way to identify the rat or rats involved. Out-of-doors, roof rats may be present in low to moderate numbers with little sign in the way of tracks or droppings or runs and burrows. Roof rats frequently enter buildings from the roof or from accesses near overhead utility lines, which they use to travel from area to area. They are often found living on the second floor of a warehouse in which Norway rats occupy the first or basement floor. Once established, they readily breed and thrive within buildings, just as Norway rats do. They have also been found living in sewer systems, but this is not common.

Rat Sign

6-20. There are a number of observable signs which would indicate the presence of roof rats living in proximity to Soldiers. These signs include—

- Sounds of rats scurrying may be the first signs that there are roof rats present in a structure. These sounds may be especially noticeable when the sounds of normal activity drop off during the night.
- Droppings are spindle shaped instead of capsule shaped and are usually one quarter of an inch in length. The tail markings and hind feet markings are the same as those for Norway rats. Runways for roof rats are difficult to determine. Droppings, urine, and tracks may not be readily seen on the floor in buildings because rats may live overhead between floors, above false ceilings, or in utility spaces, and venture down to feed or obtain food.
- Gnawing in structures where rats may be living in the attic and feeding outdoors, the damage may be restricted to tearing up insulation for nesting or gnawing electrical wiring. Sometimes rats get into food preparation areas and feed on stored foods.
- Sightings generally occur during periods of darkness. An inspection to determine the presence of roof rats often requires a nighttime search when the facility is normally shut down. The use of a bright flashlight is required to spot rats, determine travel routes, and identify the best locations to set baits and traps.

Diet

6-21. In some cases, the feeding habits of roof rats resemble those of tree squirrels, since they prefer a wide variety of fruit and nuts. They also feed on a variety of vegetative parts of ornamental and native plant materials. Like Norway rats, they are omnivorous and, if necessary, will feed on almost anything. In food-processing and storage facilities, they will feed on nearly all food items, though their food preferences may differ from those of Norway rats. They do very well on feed provided for domestic animals such as swine, dairy cows, and chickens, as well as on dog and cat foods. There is often a correlation between rat problems and the keeping of dogs, especially where dogs are fed outdoors. Roof rats usually require water daily, though their local diet may provide an adequate amount if it is high in water content.

Physical Characteristics

6-22. The physical characteristics of roof rats include the—

- Tail is longer than the head and body.
- Body is slender.
- Adult weights eight to twelve ounces.
- Eyes and ears are large.
- Droppings are about one half inch long with tapered ends.

Habits and Biology

6-23. Roof rats are suspicious of changes in the environment or new foods, for this reason it may take a couple of days for traps or poison baits to take. Rats are nocturnal, with their peak activity at dusk or before dawn. When the population is large or they are disturbed or hungry, you can see activity during the day.

6-24. Roof rats become sexually mature in two to three months, and average four to six litters per year with four to eight pups per litter. The roof rat is a climber, commonly nesting in areas above the ground in trees, vines, attics, ceiling voids, or in voids along the roof line. As their population grows they will nest in underground burrows.

HOUSE MOUSE (*MUS MUSCULUS*)

6-25. The house mouse (see figure 6-3) is a small and slender rodent and about one to two inches long, excluding tail. The house mouse has large ears, pointed nose and small eyes. The tail is as long as the head and body combined. The fur color varies, but it is usually a light gray or brown, but could be darker shades. Their droppings are about one eighth to one quarter inch long, rod shaped. They gnaw small, clean holes about one and one half inches in diameter. Many times in kitchens you will find gnawing damage on the corner of boxes and paper, shredded for their nest.

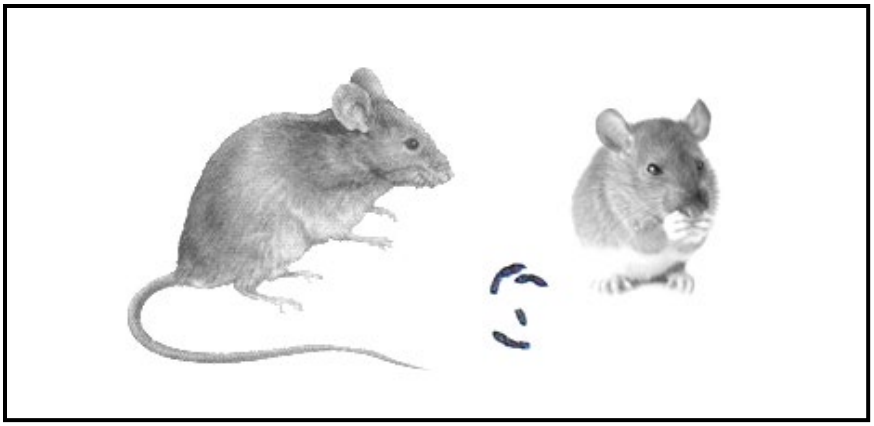

Figure 6-3. House mouse, *Mus musculus*

Habitat

6-26. The house mouse lives in and around homes, farms, commercial establishments, open fields, and agricultural lands. At times they may be found living far from human settlements, particularly where climates are moderate. The onset of cold weather in temperate regions may cause mice to move into structures in search of shelter and food.

Mouse Sign

6-27. There are a number of observable signs which would indicate the presence of house mice living in proximity to Soldiers. These signs include—

- Droppings may be found along runways, in feeding areas, and near shelter. Differentiating between mouse droppings and those of certain insects may be difficult. Mouse droppings are about one quarter inch long, whereas those of cockroaches are usually one eighth to one quarter inch long and under a magnifying glass show distinct longitudinal ridges and squared-off ends.
- Urine, both wet and dry, will fluoresce under ultraviolet light, although stains may occur along established pathways or in feeding areas. Smudge marks (rub marks) may occur on beams, rafters, pipes, walls, and other parts of structures. They are the result of oil and dirt rubbing off the rodent's fur along frequently traveled routes. They may be less apparent than rub marks left by rats.
- Tracks, including footprints or tail marks, may be seen on dusty surfaces or in mud.
- Gnawing may be visible on doors, ledges, in corners, in wall material, on stored materials, or on other surfaces wherever mice are present. Fresh accumulations of wood shavings, insulation, and other gnawed material indicate active infestations. Mice keep their paired incisor teeth, which grow continuously, worn down by gnawing on hard surfaces and by working them against each other.
- Sounds such as gnawing, climbing in walls, running across the upper surface of ceilings, and squeaks are common where mice are present.
- Visual sightings of mice may be possible during daylight hours, and mice also can be seen after dark with the aid of a flashlight or spotlight.
- Nests frequently are found when cleaning garages, closets, attics, basements, and outbuildings where mice are present. They consist of fine, shredded fibrous materials.
- Odors may indicate the presence of house mice. A characteristic musky odor is a positive indication that house mice are present, and this odor can be used to differentiate their presence from that of rats.

Diet

6-28. A mouse will eat almost anything, but prefer cereal grains, seeds, or sweet material. They require very little water, obtaining most of their water needs from their food. Mice can consume large quantities of stored seed and grains from farmers and granaries. They survive well on weeds, seeds, or insects, but when their food supply is shortened by the colder months they move inside nesting closer to a food supply. They make their nest from soft material like paper, insulation, or furniture stuffing. These nests are found in many places including: in walls, ceiling voids, storage boxes, drawers, under major appliances, or within the upholstery of furniture. Outside the nests are found in debris or in ground burrows.

Physical Characteristics

6-29. The physical characteristics of the house mouse include the—

- Body is small.
- Tail is as long as the body and head.
- Adult weights one half to three quarters of an ounce.
- Droppings are about one quarter of inch long with tapered ends.

Habits and Biology

6-30. A house mouse in a city environment may spend its entire life in buildings. In rural and suburban settings, it may not only live inside, but be found outside near foundations, in the shrubbery, weeds, crawl spaces, basements, or in garages.

6-31. Feeding times for the house mouse generally revolve around two primary feedings which occur just before dawn and at dusk. The mouse will browse on anything that it can find throughout the rest of the day at intervals of every 1 to 2 hours. They can eat about 10 to 15 percent of their body weight every day, the adults weighing about one ounce. Mice will cache food as supply permits. They get much of their water from food products.

6-32. Mice are active mostly at night, but they can be seen occasionally during daylight hours. A house mouse is an excellent climber and can run up any rough vertical surface. It will run horizontally along wire cables or ropes and can jump up 13 inches from the floor onto a flat surface.

6-33. The house mouse becomes sexually mature in two months, producing about eight litters in a one-year lifetime. Each litter averages from four to seven pups.

CONTROL TECHNIQUES FOR RODENTS

6-34. Rodent control starts with six basic steps that involve survey, environmental sanitation, rodent proofing, rodent ectoparasite (flea) control, rodent killing, and maintenance. Rodent control operations that involve cleaning and housekeeping are generally more effective at preventing rodent infestations than trapping and poisoning are at eliminating an infestation.

SURVEY

6-35. It is necessary to conduct a rodent survey to determine if an infestation exists. This may be accomplished by two methods. The first is the inspection for signs, such as droppings, rub marks, dust trails, and burrows or damage to stored materials. The second method of survey is the use of traps. A trapping program will employ both live and snap-type traps. If a trapping program is planned, data must be gathered with respect to population density, location of the infestation, and bait preference. This data will provide the basis for determining the types of traps to use; maintenance of traps required; and the placement of traps for successful catches. When trapping rats, trap placement is far more important than bait selection. Unbaited snap traps can be used if the trigger is enlarged to provide a platform on which rats may step.

ENVIRONMENTAL SANITATION

6-36. Environmental sanitation is the most important means of domestic rodent control. It is necessary to eliminate all possible food sources. Garbage and other food sources should be stored in rodent-proof containers. Garbage collection should be conducted so that excess amounts of material do not build up. Dry food stores and other possible food sources should be stacked on pallets 12 to 18 inches above the floor. Food storage areas should be swept daily and all refuse disposed of. Grass around the building should be kept closely cut to eliminate harborage areas around the building.

RODENT PROOFING

6-37. Rodent proofing involves structural modification to existing building to prevent either the entry or movement of rodents. Openings as small as one-fourth of an inch may admit small mice. All external openings such as windows on the ground level should be screened with one-fourth inch galvanized hardware cloth. Each door and door jamb should have a collar and cuff fabricated from galvanized metal. The holes around electrical lines or pipes as they enter the building should be sealed with caulking or cement. If roof rats are a problem, the second and sometimes the third stories of the building will have to be treated in this manner. Double-wall construction with hollow spaces in the walls should be eliminated as much as possible.

RODENT ECTOPARASITE CONTROL

6-38. The rat flea index is the average number of fleas found per rat. Normally, an index of three or more will require ectoparasite control measures. If disease transmission involving the rodent or its ectoparasites is an important consideration, it will be necessary to provide ectoparasite control before killing the rodents. It will be necessary to determine what ectoparasites are on the rodents during the initial rodent survey operation. Ectoparasites may be controlled by applying insecticidal dusts to rodent burrows and nests. The rodents will carry the dust into the nests killing the ectoparasites on the rodent and in the nest.

CAUTION

All pesticides must be used in strict accordance with the label directions. Using a pesticide in a manner inconsistent with its label directions is a violation of federal law.

6-39. Rodent baits are generally not recommended for mouse control inside buildings because of the potential odor from dead mice in inaccessible areas.

RODENT KILLING

6-40. To prevent the rodents from migrating from one area to another it is necessary to eliminate the population so that it does not slowly rebuild. The use of anticoagulant rodenticides is recommended. These poisons act on the coagulating mechanism in the blood and after five to fourteen days the rodent dies of internal bleeding. Anticoagulant poisons are used routinely in control operations because of their safety around humans. When dealing with large infestations it may be necessary to use *one shot* rodenticides and request assistance from preventive medicine units.

6-41. As rodents develop shyness to *single dose* poisons relatively fast, they should not be used in an area for more than one week at a time. No matter what type of rodenticide is used, if used indoors it must be placed in a tamper-proof bait station for safety purposes and to provide the rodent with a relatively secure area in which to feed. It may be necessary to provide anticoagulant rodenticide in bait boxes in food service and food storage facilities as a preventive measure to intercept any rodent that might enter at a later time. Rodenticides must always be used in accordance with the pesticide container label instructions. Glue boards and snap traps are usually the most effective devices for controlling small numbers of rodents. Either may be used outdoors in protected locations. Traps and boards must be checked regularly. Windup, multiple-catch traps can be useful for controlling large infestations in kitchens or unoccupied spaces, provided the necessary sanitation and sealing measures are also addressed.

MAINTENANCE

6-42. Once rodents have been eliminated within a building a preventive control program is established. The program includes the use of anticoagulants and maintenance or rodent proofing measures. High standards of housekeeping must also be strictly enforced to eliminate potential food sources. Periodic inspections are essential to insure that control measures are being carried out. It may be necessary to maintain a preventive control program using glue boards, traps, or anticoagulant rodenticides.

FERAL ANIMALS

6-43. Feral animals are animals that exist in a wild or untamed state, either naturally or having returned to such a state from domestication. Feral animals particularly cats and dogs, are commonly encountered by Soldiers during contingency operations and may pose a considerable health threat. Commanders are responsible for implementing practices which prevent disease and nonbattle injury caused by association with feral animals. Veterinary and public health/preventive medicine personnel support commanders by providing guidance and consultation regarding policies for health and safety of animal control staff, oversight of animal welfare including safe, effective and humane animal euthanasia, and control of human

injury and disease related to feral animals. Rabies represents the greatest disease risk from feral animals throughout the world.

RABIES

6-44. On 31 August 2011, a United States Army Soldier died of rabies. This is the first confirmed rabies death of a United States Army Soldier since the Vietnam War. The Soldier died several months after returning from a deployment to Afghanistan. Laboratory results indicate the Soldier was infected by a rabid dog while deployed to Afghanistan. During the public health investigation into the case, other members of the Soldier's unit also reported receiving dog bites in Afghanistan that were either not reported or that lacked documentation of complete evaluation or treatment.

6-45. Key facts about rabies are as follows:

- Rabies is a viral disease that can be transmitted to humans through the saliva of infected mammals.
- Animals present in deployment settings are not vaccinated against rabies as pets are in the United States.
- Humans can be infected with rabies by being bitten by infected animals or getting saliva from infected animals in open wounds, mouth, or eyes.
- You cannot always tell if an animal has rabies. Once the signs and symptoms of rabies develop, the disease is almost always fatal in man.
- Rabies is preventable. Treatments for rabies are available at medical treatment facilities. Survival requires extensive supportive care to maintain ventilation and nutrition; only three humans have survived rabies and only one without permanent after effects of the disease.

6-46. How to prevent rabies—

- Do not adopt mascots or pets when deployed. This practice, though common, is highly discouraged and dangerous.
- Do not approach, feed or handle wild or stray animals.
- If you are bitten or get animal saliva on broken skin or in your eyes or mouth, immediately wash the area with soap and water and seek immediate medical attention. Rabies is preventable if exposed individuals receive prompt medical care after being exposed.
- Report animal exposures immediately.
- Capturing animals for observation or euthanizing animals for rabies testing is best performed by qualified veterinary or force health protection personnel who are already vaccinated against the disease. If the animal is killed, its intact head should be placed in a waterproof bag; packed in ice, and carried to a veterinary or medical laboratory for examination to determine if rabies infection is present.
- Local regulations requiring vaccination and restraint of pets are vital. They afford our domestic animal population with protection from wildlife reservoirs of rabies.

Note. Failure to follow proper procedures can result in greater potential exposure to rabies.

MEDICAL TREATMENT FOR RABIES

6-47. There currently is no known treatment for rabies that can cure the disease once the person becomes symptomatic; death is imminent within one to two weeks. All individuals who may have been exposed to an animal bite or saliva should seek immediate medical evaluation and treatment. Medical treatment, if the person has not yet manifested any of the symptoms, may include what is known as postexposure prophylaxis. Postexposure prophylaxis includes wound care, injection of human rabies immune globulin and a series of four or five rabies vaccinations (doses may be reduced if the individual was vaccinated before the exposure). Medical record reviews in Afghanistan and Iraq identified individuals who did not have a complete postexposure prophylaxis regimen documented in their medical records. These individuals must be reevaluated to ensure proper postexposure prophylaxis was administered.

6-48. When medical treatment is obtained promptly following a rabies exposure, nearly all cases of rabies will be prevented. Cleaning of the wound or exposure site with soap and water for at least 15 minutes is the most important first step in treatment, followed by administration of postexposure prophylaxis. Postexposure prophylaxis is still effective if given weeks, months, or even years after a potential exposure, so older exposures still require evaluation and, if required, treatment with postexposure prophylaxis.

6-49. It is important to report and seek evaluation for all animal exposures regardless of how the animal was behaving. Units currently preparing for deployment should highlight the threat from rabies and unreported animal bites as part of their overall predeployment preventive medicine training.

SECTION II — ARTHROPODS

ARTHROPODS OF MILITARY SIGNIFICANCE

6-50. Arthropods are defined as any of numerous invertebrate animals of the phylum Arthropoda, including the insects, crustaceans, arachnids, and myriapods, that are characterized by a chitinous exoskeleton and a segmented body to which jointed appendages are articulated in pairs. Arthropods of military significance discussed in this publication include, biting midges, lice, flies, fleas, kissing bugs, mites, mosquitoes, and ticks. Table 6-2 on page 6-16 depicts arthropods of military significance and the diseases that they can transmit.

Table 6-2. Arthropods of military importance and the major diseases they transmit

Visual identification	*Common name*	*Genus*	*Diseases*
	biting midges	*Culicoides*	visceral filariasis (mansonellosis) Oropouche fever
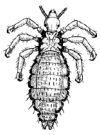	body lice	*Pediculus*	epidemic typhus relapsing fever trench fever
	black flies	*Simulium*	onchocerciasis (river blindness)
	bot flies	*Dermatobia*	myiasis
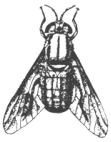	deer flies	*Chrysops*	eye worm disease (*Loa loa*) tularemia
	fleas	*Xenopsylla*	plague murine typhus

Table 6-2. Arthropods of military importance and the major diseases they transmit (continued)

Visual identification	*Common name*	*Genus*	*Diseases*
	kissing bugs	*Rhodnius* *Triatoma* *Panstrongylus*	Chagas disease (American trypanosomiasis)
	chigger mites	*Leptotrombidium*	scrub typhus
		Sarcoptes	scabies
	mouse mites	*Lyponyssoides*	rickettsialpox
	mosquitoes	*Aedes*	dengue yellow fever viral encephalitis
		Anopheles	malaria
		Culex, Aedes	viral fevers (Oropouche, Rift Valley, Chikungunya)
		All three.	lymphatic filariasis (wuchereriasis, brugiasis)
	sand flies	*Lutzomyia, Phlebotomus*	leishmaniasis sand fly fever bartonellosis

Table 6-2. Arthropods of military importance and the major diseases they transmit (continued)

Visual identification	*Common name*	*Genus*	*Diseases*
	hard ticks	*Dermacentor*	spotted fevers Colorado tick fever
		Ixodes	Lyme disease babesiosis viral encephalitis tularemia
		Amblyomma *Ixodes*	human ehrlichioses
		Hyalomma	Crimean-Congo hemorrhagic fever
	soft ticks	*Ornithodorus*	relapsing fever
	tsetses	*Glossina*	trypanosomiasis (African sleeping sickness)
	tumbu flies	*Cordylobia*	myiasis

NEGATIVE INTERACTIONS ASSOCIATED WITH ARTHROPODS

6-51. Negative interactions associated with arthropods include—

- Physical pain.
- Disease transmission.
- Envenomation.
- Myiasis.
- Allergic reactions.
- Psychological disorders.
- Death.

Physical Pain

6-52. Bites, piercings, and stings caused by arthropods can produce varying amounts of suffering among victims. Dermatosis is the most common form of skin irritation (generally localized) caused by the bites of mosquitoes, fleas, lice and bedbugs, in which symptoms can range from mild annoyance to incapacitation. Accidental injury to sense organs, although such physical trauma generally is not lethal, it may render a victim incapable of normal activity, and it can result in psychological disturbance among certain individuals.

Disease Transmission

6-53. Transmission of arthropod or vectorborne disease represents the most substantial and continuous noncombat threat to Soldiers during deployments. Historically, vectorborne diseases have produced far more morbidity and mortality (greater than 60 percent) among United States military forces during modern wars than battle injury and nonbattle injury combined. Others with their long convalescent period cause a manpower drain resulting in a major economic loss every year. Mosquitoes, flies, lice, fleas, mites, and ticks are among the most important vectors of arthropodborne diseases.

Envenomation

6-54. Envenomation is the injection of venom (toxins) into the body through bites and/or stings and is perhaps the most rapid and harmful response arthropods can inflict on humans. The response of such envenomation can range from swelling, irritation, pain, sometimes paralysis, mild irritation and limited necrosis of tissue to systemic failure and death. The venoms producing these conditions are broadly grouped as either neurotoxic or necrotic. Neurotoxic venoms are those that negatively affect the nervous system while necrotic venoms are those that destroy blood and tissue. Occasionally, the venom of some arthropods contains both neurotoxic and necrotic properties. In addition to injecting venom, some caterpillars and beetles produce toxins that cause dermatitis when contacted.

Myiasis

6-55. Myiasis is the invasion of the tissue of man or animals with the larvae (maggots) of certain flies that consume flesh or body fluids for sustenance. Such invasions may be benign or even asymptomatic, or they may result in more destructive disturbances. Cutaneous myiasis is the traumatic invasion of tissue and the most significant form of myiasis. Myiasis has tremendous potential for psychological disturbance among afflicted Soldiers.

Allergic Reactions

6-56. Soldiers may experience allergic reactions (a hypersensitive reaction to insect protein) when they come in contact with the venom, saliva, or certain body parts of arthropods. Reactions can be localized (wheals, swelling) or systemic (anaphylactic shock), and the range of severity, including death, is broad. This condition may occur among people with repeated prolonged exposure to the same type insect, such as beekeepers or workers in insectaries. It may also result from a single exposure to insects with highly allergenic proteins, such as flies or gypsy moth caterpillars.

Psychological Disorders

6-57. Soldiers may develop psychological disorders stemming from contact with insects and their relatives. Psychological threats posed by arthropods often are cumulative in their effect. In other words, the more experience an individual has the greater the negative impact on health and welfare. The importance of such cumulative encounters is a function of the number and diversity of pests in an area, the quality of living conditions, ability to escape the pests, fatigue, and stress. Under certain conditions, such as an extended deployment, nuisance pests can become a more substantial threat to mission success than disease, especially when pest densities are high and disease incidence is low.

6-58. Delusory parasitosis often is an intensely emotional psychological disorder characterized by the unfounded belief that parasites, usually insects, are living on or in the body. This condition, although very

rare, can become sufficiently severe in some individuals to be incapacitating, and these individuals often require professional behavioral health care.

6-59. Entomophobia, by comparison, is simply an irrational fear of insects and their relatives, or the damage or diseases they are capable of inflicting. For example, some individuals may develop an irrational fear of bees after being stung. The primary difference between entomophobia and delusory parasitosis is that the former occurs only in the presence of certain insects while the latter encompasses a near constant state of agitation and distress.

Death

6-60. Death may be the result of envenomation or the transmission of disease from contact with arthropods.

MANAGEMENT OF ARTHROPODS

6-61. There are a number of measures that the unit field sanitation teams can take at the unit-level to control arthropods and help prevent the spread of arthropodborne illness. Management of Arthropods can be achieved through a combination of sanitation and chemical methods.

SANITATION METHODS

6-62. Employing sanitation control methods is the best way to control arthropods. The unit field sanitation teams should always consider the effectiveness of existing sanitation practices within the unit area before resorting to the use of chemicals. Primary actions should include—

- Eliminating arthropod habitats. The safest way to control most arthropods is to eliminate their living and breeding areas.
- Controlling rodents in the unit area. Rodents are a host to a number of parasites. Rodent control plays a major role in the management of arthropods.
- Using waste disposal procedures. Collecting and properly disposing of garbage and waste is a critical factor in the control of filth flies and cockroaches.

6-63. Additional field sanitation teams actions include—

- Ensuring that garbage containers are kept tightly covered and that garbage is disposed of in approved sites.
- Ensuring that garbage and waste disposal devices are filled in and properly closed out when full or abandoned.
- Making sure that latrine facilities are properly constructed and fly-proofed. Latrines should be policed and cleaned daily.
- Keeping unit-level kitchen and food service facilities clean and free of debris that could provide food, water, and shelter.
- Avoiding animal nesting areas. In order to control exposure to mosquitoes and fleas, do not establish the area of operations near animal breeding or nesting areas such as ponds or burrows.

CHEMICAL METHODS

6-64. Employing chemical (pesticides) control methods is warranted when sanitation and physical control (may also include mechanical, cultural, biological control) efforts alone fall short of controlling arthropods in the unit area. The use of pesticides however, should always be viewed as an augmentation to effective sanitation practices and individual personal protective measures, not a replacement for them. Chemicals are not meant to take the place of the individual or unit-level preventive medicine measures.

Properties of Pesticides

6-65. Pesticides are toxic, or poisonous, substances designed to kill pests such as mosquitoes, ticks, and rodents. It is important to remember that in sufficient quantities pesticides can also be harmful or deadly to domestic animals and humans. The toxic ingredients in pesticides are often mixed with oil-based solvents

like kerosene or fuel oil, which are readily absorbed through human skin which repels water but absorbs oil. The presence of these solvents and their absorption through the skin makes them more hazardous when handled carelessly. This is why personal protective clothing and equipment must be worn when Soldiers are working with pesticides.

Note. Refer to the pesticide label and safety data sheet for specific protective clothing recommendations and safety precautions.

Estimate the Hazard

6-66. Estimating the hazard potential for any pesticide is important prior to use. To determine the hazard posed by a particular chemical, read the safety data sheet then ask the following questions:

- What are the toxic effects if the pesticide is accidentally inhaled or ingested?
- What is the concentration of the toxic substance I will be handling while mixing the pesticide and while applying it?
- How much pesticide needs to be applied to achieve the desired results?
- How often does the pesticide need to be applied?
- What environmental conditions exist at the time of application? Am I indoors or outdoors? Is there proper ventilation? Is there a breeze? What temperature is best and safest for the application of this chemical?
- Does the pesticide label list the targeted pest?
- Are there any special precautions such as—do not spray near water; toxic to fish?

Note. It is important to remember that the hazard for any pesticide is negligible when it is used correctly. It is a violation of federal law to apply pesticides inconsistent with the label.

Safety Precautions

6-67. Safety must always be the first consideration prior to using pesticides. Like all potentially hazardous substances, there are safety precautions that must be observed to avoid injury or illness for the user and the Soldiers whose living areas are being treated. Be sure only authorized, trained personnel use pesticides, and that they observe all label instructions/directions. Use the safety data sheets issued with each chemical. The safety data sheet gives the details on the danger associated with chemicals. It also provides information on safety, the way to handle the chemicals, emergency response techniques, health effects, and storage and proper disposal information. When not being used pesticides should not be stored or used near an open flame. Pesticides must never be mixed. Mixing pesticides can render them ineffective or, worse; can create an even more toxic substance.

Disposal of Pesticides

6-68. Pesticides must be disposed of in an appropriate manner to prevent injury to people, animals, and the environment. The easiest way to dispose of pesticides is to avoid having any to dispose of it is best to use the entire mixed amount of pesticide against the arthropod you have targeted. All pesticides, pesticide containers, and pesticide-related waste will be disposed of in accordance with product label instructions. The label instructions comply with Environmental Protection Agency requirements. In the event a product is found without label instructions, consult supporting preventive medicine personnel for guidance.

6-69. To dispose of an empty pesticide container properly—

- Triple-rinse the container to ensure that the container is free of chemicals prior to disposal.
- Then crush or puncture the container prior to disposal to render the container unusable. To triple-rinse the container—
  - First, fill the pesticide container with water.

- Pour the rinse water into the two-gallon sprayer along with the water used to dilute the pesticide being applied.
- Repeat steps one and two, two more times.

MANAGEMENT THROUGH INDIVIDUAL PREVENTIVE MEDICINE MEASURES

6-70. The Department of Defense Insect Repellent System is made up of the following three components:

- Permethrin on the uniforms.
- DEET on the skin.
- The proper wear of the uniform.

6-71. When used in conjunction with one another these components provide excellent protection against a wide variety of arthropods and arthropodborne diseases.

PERMETHRIN

6-72. Permethrin is an insect repellent that is applied to nonfactory permethrin-treated uniforms, tentage, and insect netting to repel arthropods. Permethrin should not be applied to the skin. There are three ways in which permethrin can be applied.

- Individual Dynamic Absorption Application Kit.
- Five percent aerosol can.
- Applying permethrin using the two-gallon sprayer.

INDIVIDUAL DYNAMIC ABSORPTION APPLICATION KIT

6-73. Effective October 2012, the Army factory treats the Army Combat Uniform with permethrin prior to Soldier issue or individual procurement and is the most preferred method of treatment. The Individual Dynamic Absorption Application Kit is the first preferred method for treating a nonpermethrin-treated Army Combat Uniform.

Note. Factory treated permethrin uniforms may not be retreated with permethrin by any means in accordance with current Environmental Protection Agency guidance.

6-74. The Individual Dynamic Absorption Application Kit contains enough material to treat one Army Combat Uniform. It contains two individual bottles of 40 percent permethrin, two watertight zip lock bags, two sections of string, one pair of disposable plastic gloves, and a clothing marker. The procedures for treating the Army Combat Uniform jacket are found on the back of the plastic bag marked A. The procedures for treating the Army Combat Uniform trousers are found on the back of the bag marked B.

Note. Hanging the uniform in the sunlight will decrease the effectiveness of the permethrin, therefore hang uniforms in shady area to dry outside. Machine dryers, when available, may also be used to dry the uniform.

6-75. Once treated, make the uniform on the inside with the statement permethrin-treated and the date. This method of treatment is good for the life of the uniform or 50 launderings. Do not retreat the uniform unless told to do so by the installation medical authority. Do not treat the underwear or the cap. Remember that dry cleaning will completely remove permethrin from the uniform.

TREATING WITH THE FIVE PERCENT PERMETHRIN AEROSOL CAN

6-76. Treating a uniform with this method is effective for up to six weeks or six launderings. These instructions can be found on the label on the back of the can. This is the second best method for applying permethrin to the uniform.

Note. The treatment should moisten the uniform fabric just enough to cause a slight color change (approximately three quarters of the can). Use the remaining permethrin to treat your bed netting.

TREATING WITH A TWO-GALLON SPRAYER

6-77. Treating a uniform with this method is the least preferred method for two reasons. First, it is very time intensive. Secondly, trained field sanitation team members or preventive medicine personnel should be the only persons to perform it. Safety is also a major concern. Several additional steps and assistance are required when treating uniforms using the two-gallon sprayer method. These include identifying an area that is prepared to separate the treated uniform from the ground (protective barrier), personnel to assist in flipping the clothing in order to operate more efficiently, an approved drying area to hang the clothing and proper disposal procedures.

6-78. Be sure that whoever applies the permethrin is certified, wears goggles, gloves, and a properly fitted respirator to carry out this method of application. Use this method as follows:

- To treat the bed net, spray both sides then allow the netting to dry completely. Retreat it every six months or six launderings.
- To treat tentage and liners, treat the entryways, inside surfaces, ceiling, walls, and floor. Allow the tentage to dry completely before occupying the tent. If you are deployed in a moderate climate, retreat the tentage every nine months. In tropical climates, retreat the tentage every six months.
- When using this method several steps are essential for application and clean up. First the approved air compressed sprayer must be calibrated to deliver a total of 32 fluid ounces or mixture to each uniform front and back. When cleaning the sprayer after use it must be triple-rinsed with water (ensure the reinstate is collected, used, or disposed of properly).

N, N-DIETHYL-META-TOLUAMIDE

6-79. The standard skin repellent for the United States military since the mid 1950's has been the chemical N, N-diethyl-meta-toluamide that is commonly referred to as DEET which repels mosquitoes, biting flies, chiggers, deer flies, fleas, and stable flies. In tropical areas DEET repels terrestrial leeches. The use of DEET is preferred over commercial products because the long-term effects of commercial products on your health have not been evaluated. In addition, when compared to commercial products, DEET was found to be more effective.

Note. Before using a commercial insect repellent, be sure to check with preventive medicine personnel. Additional authorized DEET alternative insect repellents for use on the skin are available in the Department of Defense National Stock System.

6-80. Squeeze two and one half milliliters of DEET into the palm of your hand (approximately the length of the strip on the side of the tube, or about three inches). Rub your hands together lightly, and then apply a thin layer over your forearms, face, neck and ears. Be sure to apply DEET to all exposed skin. Apply the repellent two to three inches underneath the edges of your uniform.

Note. Apply DEET repellent before applying camouflage.

6-81. Wash hands after applying DEET to avoid accidental contact with eyes or other sensitive areas. DEET has been used safely for over 50 years by billions of people worldwide. Although it has an excellent safety record, there have been isolated reports of harmful effects associated with its use. Most of these have been related to improper use, such as swallowing, spraying into the eye or applying to already irritated skin. While most of the complaints involve temporary minor skin or eye irritation, rare cases of toxic encephalopathy (inflammation of the brain) have been reported, but not confirmed, to be associated with DEET usage, especially in young children. Other reported adverse reactions associated with, but not confirmed to be directly caused by DEET have included headache, nausea, behavioral changes,

disorientation, and loss of muscle coordination, irritability, confusion, and difficulty sleeping. While 200 million or more people use DEET each year, there have been remarkably few reports of toxicity as a result of dermal application.

Note. Under normal training conditions, DEET is effective for up to 12 hours. If training or deployed in a warm, humid climate where you might sweat a lot, you should reapply DEET more often to ensure proper protection. This also applies if you are working or training in the rain.

PROPER WEAR OF THE UNIFORM

6-82. The Army Combat Uniform is designed to protect Soldiers from many elements they are likely to encounter in the field. During field training exercises and deployments sleeves should be worn down, secured at the wrist, and collar closed. Keep every button/zipper/hook and loop tape on the Army Combat Uniform jacket closed.

6-83. Wearing the sleeves down and keeping the jacket closures secured provides protection from insect bites, poisonous plants, and from the harmful effects of the sun.

Note. Do not apply DEET to skin that is irritated or infected as a result of sunburn as this will increase vulnerability to insects.

6-84. The T-shirt should be worn tucked into your Army Combat Uniform trousers at all times to decrease entry access by crawling arthropods at the waistline. This is especially important when your tactical situation requires that you lie on the ground or perform low crawls.

Note. If your situation requires tactical low crawling or lying on the ground in a defensive posture, you should apply a thin layer of DEET to your abdomen around your belt line to further protect you from insects.

6-85. Keep the Army Combat Uniform trousers bloused loosely inside your boots or into the sock. This forces nonflying pests such as ticks, stinging ants, and spiders to climb up the outside of the pant leg, thus decreasing access to the skin and increasing the likelihood of being seen.

6-86. The Army Combat Uniform should fit loosely and should not be starched.

- Tight uniforms make it easier for biting insects to reach your skin.
- Tight uniforms decrease the body's ability to cool itself.
- Starch keeps the fabric from *breathing*.

6-87. When required, wear a head net to protect your face and neck from biting insects.

Note. Local command policy and medical intelligence reports will dictate the need for head nets.

PROTECTING SOLDIERS AT RISK

6-88. The times when a Soldier is most at risk of insect bites or arthropodborne illness are during physical training exercises, while at rest, or while sleeping. This is especially true since these activities are performed in clothing other than the Army Combat Uniform. Protective measures that can be taken to reduce risk during these activities include—

- Enclosed air conditioned barracks or screened in billeting areas. While screened billets alone do not offer complete protection, they do reduce the number of insects that can gain access to Soldiers.
- Use bed nets treated with permethrin while Soldiers are at rest. Ensure that the nets are properly set up and tucked in at all times, even when you are not in bed.

Note. Inspect bed nets periodically for rips and tears. Repair small rips with a sewing kit. Bed nets with large rips should be turned in to your supply section for replacement.

- Applying DEET to all exposed skin.

Note. The highest incidence of arthropodborne illness occurs when Soldiers are not wearing their Army Combat Uniform.

- The most effective and obvious means of preventing exposure to arthropods is to avoid their known habitats. Absolute avoidance of arthropod pests is often neither practical nor possible. If the tactical situation allows, choose bivouac sites that are dry, open, and as uncluttered as possible. Avoid sites with rodent burrows and proximity to local settlements, animal pens, and other areas where arthropod infestations are likely to be concentrated.

CONTROLLING BITING ARTHROPODS THAT ARE DISEASE VECTORS

6-89. Effective control of disease vectors requires developing and implementing a comprehensive program consisting of predeployment assessment of available information, on-site surveillance, deployment of control methods (chemical and nonchemical usually directed at multiple life stages) and reassessment. Information regarding integrated pest management programs may be found through the Armed Forces Pest Management Board.

6-90. Predeployment planning includes determining the disease vectors you will likely have to control in the area of operations. Be aware that biting pests that are not disease vectors can also pose a significant health threat and have caused many casualties during military exercises, and during actual contingency operations. These casualties were victims of secondary infections resulting from arthropod bites, or suffered severe allergic reactions to such bites. The greatest threats are in tropical and subtropical areas, where warmth and moisture promote rapid growth of fungal and bacterial infections, especially in field situations where there is little opportunity to keep clean and dry. Healing of minor wounds is very slow in the tropics and is usually delayed further because scratching continually reopens the bite site. Infectious organisms are often introduced by scratching. So even in areas relatively free of vectorborne diseases, plan on controlling biting pests that indirectly produce casualties from secondary infections or allergic reactions.

CONTROLLING VENOMOUS ARTHROPODS

6-91. Stings, bites or other contact with venomous arthropods can result in dermatitis, severe neurological or cytological symptoms, localized or systemic allergic reactions, and secondary bacterial infections. Examples include bees, wasps, hornets, yellow jackets, spiders, centipedes, scorpions and urticating caterpillars. Soldiers should be taught to recognize local venomous arthropods and ways to avoid them when living in the field. Management of these pests usually involves a localized response to include habitat modification, limited pesticide application to include residuals and baits and environmental sanitation.

CONTROLLING SNAKES

6-92. Snakes can negatively impact military operations. Their presence alone is sufficient to cause anxiety among troops, sometimes enough to negatively impact performance. However, only venomous snakes pose a serious health threat to people. Venomous snakes are found in almost every habitat, potentially impacting military operations throughout the world. Fortunately, most are harmless with only a few venomous species in any region. If poisonous species cannot be positively identified, assume all are venomous and leave them alone.

6-93. If control is necessary, great care must be taken to avoid bites. Preventive measures include removing rodents and their harborage from the area (reducing access to potential food sources), clearing excess clutter and monitoring living and working areas, reducing potential access sites. If snake removal is necessary, snake trap glue boards may be used in certain circumstances (it can catch up to an 8-foot snake

without hurting them) so they can either be destroyed or released at remote location. Additionally, physically removing snakes using snake tongs may be required, but should only be attempted by trained and experienced personnel. Additional information concerning snakes may found in The United States Air Force Guide to Operational Surveillance of Medically Important Vectors and Pests or the Armed Forces Pest Management Board Technical Guide Number 24.

THE DEPARTMENT OF DEFENSE PESTICIDE HOTLINE

6-94. The Department of Defense Pesticide Hotline can be reached by phone, commercial 410-436-3773 Defense Switching Network 312-584-3773, or at email address: usarmy.apg.medcom-aphc.mbx.pesticide-hotline@mail.milhttps://phc.amedd.army.mil/topics/envirohealth/epm/Pages/DoD-Pesticide-Hotline.aspxl. Additional assistance is available from the Department of Defense Armed Forces Pest Management Board website. They provide the Department of Defense community with the following services:

- Assist in interpreting label information and provide the federal and state registration status of a particular product.
- Interpret/cite regulations pertaining to pest management, pesticide handling and usage.
- Assist with selection of the most appropriate products for the specific pest situation.
- Provide general information on pest biology, (for example, life cycle, habitat, host preference) to maximize control efforts and minimize reliance on pesticides.
- Pesticide application, provide information on the equipment and personal protective measures required for specific applications.
- Provide assistance in recognizing potential environmental issues and suggest alternative strategies and countermeasures.
- Obtain copies of pesticide safety data sheets and assist in understanding the properties of a particular product.
- Produce, provide and/or locate fact sheets and educational materials on pesticide active ingredients, pest biology, surveillance, and control measures.
- Coordinate identification services to ensure timely/accurate identification of a particular plant/animal specimen or image.
- Identify unique Department of Defense resources best equipped to assist the customer's specific needs.

COUNTRY-SPECIFIC PEST MANAGEMENT INFORMATION

6-95. Information on country-specific pest management is available to commanders and unit field sanitation team members from the Information Services Division of the Armed Forces Pest Management Board. The Armed Forces Pest Management Board publishes Disease Vector Ecology Profiles which are concise summaries of the vectorborne diseases that occur in specific countries or regions. Contingency information may also be obtained over the internet by accessing the Armed Forces Pest Management Board homepage.

Chapter 7
Heat Injury

HEAT INJURY

7-1. Heat injury is defined as environmental injuries that result when a Soldier is exposed to extreme heat for extended periods of time. A Soldiers' condition may also be affected and compromised in specific environments due to the protective equipment and gear worn to shield them from injury and chemical, biological, radiological, and nuclear contamination during operations. Identification of high-risk personnel (basic trainees, Soldiers with a history of heat injury, and overweight Soldiers) helps both leaders and individuals prevent injuries and cope with climatic conditions. Acclimatization and protection from undue heat exposure are also very important. Instruction on living and working in hot climates also contributes toward prevention.

7-2. Under normal conditions, the human body is able to shed excess heat through the skin and by exhaled breath, constituting heat relief. Some heat is discharged by radiation from the skin, but the body relies mostly on evaporation of sweat from the skin to cool itself. If the body is unable to cool itself normally and if the heat strain becomes more severe, a rapid rise in body temperature and heart rate can occur. Soldiers may not realize that this is happening because there is no pain associated with these events. For more detailed information, refer to Technical Bulletin Medical 507.

7-3. Mental sharpness and performance can be adversely affected with an increase in body temperature of just two degrees Fahrenheit above normal. If the heat stress continues to increase and is not checked, a rise of five degrees Fahrenheit can result in serious illness, injury, and death. Heat stress slows the reaction time and decision times. Routine tasks are done more slowly. Errors of omission are more common. Vigilant task performance will degrade slightly after 30 minutes and markedly after 2 to 3 hours.

SECTION I — BASICS OF HEAT INJURY RISK

THREAT

7-4. Exposure to high environmental temperature produces heat stress in the body. As the body attempts to compensate, physiological strain or heat load results. This strain, usually in combination with other strains caused by work, dehydration, fatigue, and taking certain types of dietary substances may lead to heat injury. The conditions which influence the heat equilibrium of the body and its adjustments are the air temperature; the temperature of surrounding objects; the sun's radiant heat; the vapor pressure of the water in the air (relative humidity); the air movement; and the amount and type of clothing worn. Another important factor that influences the heat equilibrium is the metabolic heat produced by the body because of physical activity.

DEFENSE

7-5. Biological adaptations to repeated heat stress include heat acclimatization and acquired thermal tolerance. The magnitude of both adaptations depends on the intensity, duration, frequency, and number of heat exposures. These adaptations are complementary as heat acclimatization reduces physiologic strain, and acquired thermal tolerance improves tissue resistance injury for a given heat strain. The body rids itself of heat normally through the skin and by exhaled breath, constituting heat relief. Some heat is discharged by radiation from the skin, but the body relies mostly on evaporation of sweat from the skin to cool. The adverse impact of high environmental temperature can be reduced by drinking enough water,

wearing clothing properly, maintaining a high level of fitness, and resting after exposure to heat. These measures contribute to the body's normal mechanisms for relieving its heat load.

ACCLIMATIZATION

7-6. Most Soldiers' physiological responses to heat stress improve in 10 to 14 days of exposure to heat and regular strenuous exercise. Factors to consider in acclimatizing Soldiers are the wet bulb-globe temperature index; work rates and duration; uniform and equipment; and Soldiers' physical and mental conditions.

RISK FACTORS

7-7. Risk factors for heat injury include the following:

- High heat category, especially on several sequential days (measure the wet bulb-globe temperature index when ambient temperature is over 75 degrees Fahrenheit).
- Exertional level of training, especially on several sequential days.
- Acclimatization.
- Time (length of heat exposure and recovery time).
- Not acclimatized to heat.
- Exposure to any of the following in the previous two to three days:
  - Increased heat exposure.
  - Increased exertional levels.
  - Lack of quality sleep.
- Poor fitness (unable to run two miles in less than 16 minutes).
- Overweight.
- Minor illness (cold symptoms, sore throat, low-grade fever, nausea, vomiting) will increase the amount of heat to be dissipated by the body.
- Taking medications (either prescribed or over the counter)/supplements/dietary aids (for example, allergy or cold remedies, ephedra supplement) that inhibit sweating, such as atropine, antihistamines, some tranquilizers, cold medicines, and some antidiarrheal medications.
- Use of alcohol in the last 24 hours especially the amount needed to cause hangovers.
- Prior history of heat injury (any heat stroke, or more than two episodes of heat exhaustion).
- Skin disorders such as heat rash and sunburn that prevent effective sweating.
- Age more than 40 years old.
- Heavy metals and hot foods and drinks (coffee and tea) add heat to the body and put unnecessary stress on the body.
- Tight clothing is detrimental to heat loss from the body. Clothing should be loose so as not to restrict circulation or impede movement of air over the skin.

SECTION II — TYPES OF HEAT INJURY AND HEAT-RELATED CONDITIONS

HEAT CRAMPS

7-8. Heat cramps are painful muscle cramps that may occur after exposure to heat and are caused primarily by the excessive loss of mineral salts from the body. Heat cramps differ from exertional muscle cramps in that the entire muscle is not involved. Exertion muscle cramps are more apt to occur during exercise. Heat cramps normally involve the muscles of the arms, legs, and abdomen and may be severe enough to render a Soldier ineffective. Heat cramping may be accompanied by symptoms of heat exhaustion.

HEAT EXHAUSTION

7-9. Heat exhaustion is the most common form of heat injury and is generally not associated with evidence of organ damage. It is a result of peripheral vascular collapse due to excessive salt depletion and dehydration. This condition is the result of excessive loss of both salt and water, usually due to profuse sweating as the body attempts to cool itself. As evidenced by the profuse sweating, with heat exhaustion the body's heat balance mechanism is still functioning normally. Classic symptoms include profuse sweating, trembling, weakness, loss of coordination. Additional symptoms may include headache, tingling in the hands and feet, paleness, difficulty breathing, irregular heartbeat, loss of appetite, nausea, and vomiting. The skin is generally cool and moist from the evaporation of sweat, the pulse rate is rapid (120 to 200 beats per minute), blood pressure may be low, and body temperature may be lower than normal (as in cases where hyperventilation is present) or slightly elevated, but the rectal temperature is usually elevated.

HEAT STROKE

7-10. Heat stroke is the result of the body's heat balance mechanism collapsing and the primary method of heat loss (cooling by evaporation of sweat) is shut down. Early signs of heat stroke include headache, dizziness, delirium (mental confusion), weakness, nausea, vomiting, and excessive warmth; however, sweating may or may not be absent. The most significant sign of heat stroke is a body core temperature of over 106 degrees Fahrenheit or 41.3 degrees Celsius with a rectal temperature exceeding 108 degrees Fahrenheit or 42 degrees Celsius. Although the casualty may first progress through the symptoms of heat cramps or heat exhaustion, the onset of heat stroke may occur with dramatic suddenness with collapse and loss of consciousness. Profound coma is usually present and convulsions may occur. In the past, heat stroke victims were described as always having hot, red, dry skin. However it has been found that some heat stroke victims may just as often as not be moist from sweat. Therefore, upon initial evaluation, the skin cannot be the differentiating factor in deciding on the degree of the heat injury. Soldiers who have suffered from only one attack remain very susceptible to repeated heat injuries. Therefore, these individuals should avoid subsequent exposure to hot weather conditions.

DANGER

Heat stroke is a medical emergency! To prevent permanent physiological damage or death, the Soldier's condition must be quickly identified and treatment must begin immediately.

7-11. In addition to the heat injuries discussed in paragraphs 7-8 through 7-10, leaders and Soldiers must be aware of the hot-weather related conditions discussed in paragraphs 7-12 through 7-16. The severity of these conditions ranges from an annoyance with some physical discomfort, to serious illness and death of the Soldier experiencing them. All of them can contribute to onset of the heat injuries listed above.

HEAT RASH

7-12. Heat rash (prickly heat) is caused by restrictive clothing, excessive sweating, and inadequate hygiene. It can develop when sweat ducts become blocked and swell and often leads to discomfort and itching. Heat rash can prevent effective sweating and increase a Soldiers risk for heat injury. Heat rash looks like dots or tiny pimples. The affected areas can get irritated by clothing or scratching. In rare cases, a secondary skin infection my present itself and in that case look for signs of infection.

SUNBURN

7-13. Sunburn is caused by exposure to the sun's ultraviolet radiation without protection from clothing or sunscreen. Over exposure to ultraviolet radiation can kill the cells that form the skin which is the body's first line of defense for climatic exposure and infection. It can prevent effective sweating and increase a

Soldiers risk for heat injury. Symptoms include edema, itching, peeling skin, rash, nausea, fever, syncope (fainting), and either first or second degree burns.

Note. Soldiers must use Army approved sunscreen to protect exposed skin in any climate whether hot or cold. Army approved sunscreen can prevent sunburn and reduce the risk of skin cancers when used in accordance with the instructions on the product label.

SKIN CANCER

7-14. Skin cancer, including basal and squamous cell carcinomas and melanoma, is the most common of all cancers. Exposure to ultraviolet radiation from the sun (regardless of cloud cover or low temperature) sets the conditions for skin cancer. Soldiers with fair skin that burn and freckle easily, light blue/green eyes and either red or blonde hair are at highest risk for developing melanoma; however, anyone can develop skin cancer.

RHABDOMYOLYSIS

7-15. Rhabdomyolysis or rhabdo is the breakdown of muscle fibers and release of muscle fiber products into the circulation, producing muscle tenderness, muscle weakness, and abnormal urine color (dark, red, or cola colored). It is not classified as a heat injury but is caused by extreme exertion in a person who is unaccustomed to exertion, especially if subjected to environmental heat stress with inadequate hydration and electrolyte abnormalities from an inadequate diet and/or abuse of laxatives or diuretics. Some of the muscle breakdown products are toxic to the kidney and frequently result in kidney damage. Sickle cell trait can increase a Soldiers' risk for rhabdomyolysis.

HYPONATREMIA

7-16. Hyponatremia (water intoxication) is an electrolyte disturbance in which the sodium concentration in the blood serum is lower than normal often caused by fluid overload (such as drinking more than 12 quarts of water per day) and under replacement of salt losses (not eating enough salted food). This condition can be deadly. Symptoms of hyponatremia can mimic a heat injury, so it is important that Soldiers regulate their fluid intake and diet. Repeated vomiting and nausea, headache, confusion, lethargy, fatigue, appetite loss, restlessness and irritability, muscle weakness, spasms, or cramps, seizures, and decreased consciousness or coma are all signs that suggest over hydration in the presence of heat injury.

Note. Any Soldier who is vomiting repeatedly and may have sustained a heat-related injury should be immediately evacuated.

SECTION III — PREVENTION STRATEGIES

ACCLIMATIZATION

7-17. Most heat-related injuries can be prevented or minimized when Soldiers are properly acclimatized.

7-18. Soldiers that are adequately heat acclimatized have developed biological adaptations that reduce physiologic strain (for example, heart rate and body temperature), improve physical work capabilities, improve comfort and protect vital organs (brain, liver, kidneys, and muscles) from heat injury. One of the most important biological adaptations from heat acclimatization is an earlier and greater sweating response which facilitates acclimatization.

7-19. Heat acclimatization is specific to the climate (desert or jungle) and physical activity level. A Soldier's acclimatization is dependent on the degree to which he exerts himself. Soldiers who only perform light duty or brief physical work will only achieve a level of heat acclimatization that allows them to perform similar tasks. If they attempt more strenuous tasks or tasks that require prolonged effort,

additional acclimatization and improved physical fitness is needed for them to successfully perform those tasks. See table 7-1 for the benefits of heat acclimatization.

Table 7-1. Benefits of heat acclimatization

Thermal comfort	*Benefit*
Core temperature	Lowered
Sweating	Starts earlier and heavier
Skin blood flow	Begins earlier
Body heat production	Lowered
Exercise performance	***Benefit***
Heart rate	Lowered
Thirst	Improved
Electrolyte losses	Reduced
Organ protection	Improved

ACCLIMATIZATION TECHNIQUES

7-20. Generally, about one week of daily heat exposure is needed to induce heat acclimatization; however, Soldiers who are unusually susceptible to heat will require additional time to become fully acclimatized. Heat acclimatization requires a minimum daily heat exposure of about 2 hours (can be broken into two one-hour exposures) combined with physical exercise that requires cardiovascular endurance, rather than strength training. Gradually increase the exercise intensity or duration each day. Work up to an appropriate physical training schedule adapted to the required physical activity level for the environment.

7-21. The body's acclimatization to heat begins with the first exposure and it's usually well developed by the end of the first week. However, Soldiers who are unusually susceptible to heat will require additional time to become fully acclimatized. Once acclimatized to heat, a Soldier will retain adaptation for about one week after leaving the hot environment, but if he's not exposed to work in high temperatures the acclimatization will decrease at a variable rate. Most acclimatization is completely lost within one month.

Maintain Good General Health

7-22. The general physical condition of a Soldier has a significant bearing on his reaction to heat stress. A variety of conditions that may increase an individual's risk of heat injury include nonacclimatization of Soldiers; new recruits; infections; fever; immunization reaction; heat rash; sunburn; fatigue; excess weight; heavy meals and hot foods; alcoholic consumption resulting in hangovers; drugs which inhibit sweating; tight clothing; and previous history of heat stroke.

Establish Work/Rest Schedules

7-23. As the heat load increases, work/rest schedules should be established. Table 7-2 on page 7-6 gives examples of suggested work/rest periods that are based upon work equal to that of marching with a 20-pound pack at a rate of two and one half miles per hour. Leaders should also be encouraged to take advantage of cooler hours to accomplish a portion of the work. Lighter work can be carried out for a longer period, while heavier work should be carried out for shorter periods of time.

Table 7-2. Examples of work and their classification

Easy work	*Moderate work*	*Hard work*
Walking on hard surfaces at 2½ mph with less than a 30-pound load. Weapon maintenance. Manual of arms. Marksmanship training. Drill and ceremony.	Walking on hard surfaces at 3½ mph with less than a 40-pound load. Walking on loose sand at 2½ mph with no load. Calisthenics. Patrolling. Individual movement techniques, such as the low crawl or high crawl. Defensive position construction. Field assaults.	Walking on hard surfaces at 3½ mph, with more than a 40-pound load. Walking on loose sand at 2½ mph with load. What about times or duration of the events.
Legend: mph miles per hour		

7-24. For essential tasks that must be completed, arrange for two work details so that one group of Soldiers can work while the other group rests. Always ensure that adequate water is available to the Soldiers.

7-25. Soldiers should be allowed to rest and stay in the shade as much as possible during midday hours when the temperature is at its hottest.

PROTECTION FROM THE ENVIRONMENT

7-26. The best protection a Soldier has from the environment is his uniform. The Army Combat Uniform is designed to protect your skin from harmful ultraviolet rays.

7-27. Although clothing reduces exposure, it also decreases the movement of air over the surface of the body. Therefore except when exposed to the direct rays of the sun, Soldiers in a hot environment should wear the least allowable amount of clothing.

7-28. There are other ways to protect Soldiers from the environment that are often overlooked. For example, simply marching over grass instead of a paved surface will protect a Soldier from the heat reflected off of the hard surface.

SECTION IV — HEAT INJURY PREVENTION TOOLS

TRAINING AND EDUCATION

7-29. An essential element of heat injury and illness awareness and prevention is training and education. Training should occur at all levels within the unit. Heat injuries are more likely to be avoided when Soldiers are trained and when they are supervised by informed leaders.

7-30. Soldiers must be taught that there are serious and potentially fatal consequences to heat injuries and related illnesses, and how they can avoid becoming casualties.

7-31. Table 7-3 provides strategies and recommendations for acclimatizing Soldiers to operate in hot weather environments.

Table 7-3. Heat acclimatization recommendations for Soldiers

Strategy	*Recommendations for implementation*
Start early.	1. Start at least one month prior to training. 2. Be flexible and patient—performance benefits take longer than the physiological benefits.
Mimic the training/operational environment climate.	1. In warm climates, acclimatize in the heat of the day. 2. In temperate climates, train in a room wearing sweats.
Ensure adequate heat stress.	1. Induce sweating. 2. Work up to 100 minutes of continuous physical exercise in the heat. Be patient. The first few days, Soldiers may not be able to go 100 minutes without resting. 3. When Soldiers can comfortably exercise for 100 minutes in the heat, continue for at least seven to 14 days with added exercise intensity.
Understand the importance of eating regularly and drinking enough water to adequately rehydrate.	1. Soldiers' thirst mechanism will improve as they become heat acclimatized, but they will still under drink if they rely on thirst sensation. 2. Heat acclimatization will increase your fluid requirements. 3. Dehydration will negate most benefits of physical fitness and heat acclimatization. 4. Soldiers will sweat out more electrolytes when not acclimatized, so add salt to your food, or drink electrolyte solutions during the first week of heat acclimatization. 5. A convenient way to learn how much water a Soldiers body needs to replace is to have them weigh before and after the 100 minutes exercise in the heat. For each pound (0.454 kilograms) lost a Soldier should drink about ½ quart (about ½ liter) of fluid. 6. Do not skip meals, as this is when the body replaces most of its fluid and salt losses.

7-32. Leaders should be taught to identify conditions under which heat injuries are most likely to occur. They must be able to recognize the earliest signs of heat injury and take action to prevent the development of serious heat-related injuries. Table 7-4 on page 7-8 provides specific examples of work, rest, and water consumption requirements.

Table 7-4. Work/rest and water consumption guide

Heat category	WBGT index in degrees Fahrenheit	Easy work		Moderate work		Hard work	
		Work/rest minutes	Water intake (qt/hr)	Work/rest minutes	Water Intake (qt/hr)	Work/rest minutes	Water intake (qt/hr)
1	78°–81.9°	NL	½	NL	¾	40/20	¾
2 (Green)	82°–84.9°	NL	½	50/10	¾	30/30	1
3 (Yellow)	85°–87.9°	NL	¾	40/20	¾	30/30	1
4 (Red)	88°–89.9°	NL	¾	30/30	¾	20/40	1
5 (Black)	> 90°	50/10	1	20/40	1	10/50	1

Notes:
The work/rest times and fluid replacement volumes will sustain performance and hydration for at least 4 hours of work in the specified heat category. Individual water needs will vary ± ¼ qt/hr.
Rest means minimal physical activity (sitting or standing), accomplished in the shade if possible.
CAUTION: Hourly fluid intake should not exceed 1½ quarts. Daily fluid intake should not exceed 12 quarts.
Wearing body armor in humid climates adds 5°F to the WBGT index.
Wearing chemical, biological, radiological, and nuclear protective ensemble in humid climates adds 10°F to the WBGT index.

Legend:

°F	degrees Fahrenheit
NL	no limit to work time per hour
qt/hr	quarts per hour
>	greater than
±	plus or minus
WBGT	wet bulb-globe temperature index

7-33. Leaders must monitor and enforce hydration standards to ensure that Soldiers—

- Have adequate time to rehydrate.
- Drink water frequently.
- Do not exceed 1½ quarts of water per hour or 12 quarts per day.
- Make water more palatable, if possible, by cooling.
- Do not empty their canteens to lighten a heavy load.
- Are well hydrated by asking the Soldier about the color of their urine (urine is clear when well hydrated).
- Eat all meals during the meal breaks.
- Have table salt available to add to food when the heat category is high.
- Execute random checks.
- Direct spot checks by leaders.
- Enforce battle buddy checks. Battle buddies need to be aware of each other's eating, drinking and frequency of urination.

Note. Leaders should be located to observe and react to heat casualties when conducting dispersed training.

HEAT INJURY CONTROLS

7-34. Once the decision to accept risk is made at the appropriate level according to regulatory guidance, the commander can implement the following proven heat injury controls to ensure the safety of Soldiers:

- The wet bulb-globe temperature index is updated hourly when the ambient temperature is higher than 75 degrees Fahrenheit.
- Adhere to established work/rest cycles in high heat categories.

- For tasks requiring continuous effort, adhere to the continuous work/water consumption guide (without rest) and other standardized guidelines for warm weather training conditions. Allow several hours of rest afterwards.
- Training event incorporates good prior planning.

7-35. Leaders must ensure that Soldiers adhere to established uniform wear policies as follows:

- Heat categories 1 and 2, no restrictions.
- Heat category 3—
  - Unblouse trouser legs.
  - Unbuckle belt.
- Heat category 4 and 5—
  - Unblouse trouser legs and unbuckle web belt.
  - Remove T-shirt from under uniform top or remove uniform top down to T-shirt (depends whether biting insects are present).
  - Remove helmets unless there are specific safety reasons to keep them on.
- For Soldiers wearing the chemical, biological, radiological, nuclear protective ensemble, add 10 degrees Fahrenheit to the wet bulb-globe temperature index for easy work, and 20 degrees Fahrenheit to wet bulb-globe temperature index for moderate and hard work.
- For Soldiers wearing body armor, add 5 degrees Fahrenheit to the wet bulb-globe temperature index.

WET BULB-GLOBE TEMPERATURE INDEX

7-36. The purpose and general use of the wet bulb-globe temperature index is to determine the amount of heat stress on the body. Monitoring the index enables leaders to determine the proper preventive measures needed during hot conditions.

7-37. Compute the wet bulb-globe temperature index on the site where the Soldiers are working. If this is not possible, you can obtain the information from preventive medicine or the meteorological service.

7-38. Peak temperatures usually occur between 1200 and 1600 hours. Local and regional conditions may warrant modification of the work schedule during these peak hours.

WET BULB-GLOBE TEMPERATURE KIT

7-39. The wet bulb-globe temperature index kit is enclosed in an aluminum case sealed with a stainless steel clasp. There is a threaded hole on the bottom of the case to attach it to a photographer's tripod. Inside the case are a wet bulb thermometer, a black globe thermometer, and a dry bulb thermometer. Each thermometer is mounted on a hinged assembly that can be lifted out of the case, enabling you to take the necessary readings.

Wet Bulb Thermometer

7-40. The wet bulb thermometer is a standard laboratory glass thermometer with the bulb encased in a cotton wick. The wick is inserted in a small flask filled with the distilled water, and the flask is hung at least ¾ of an inch below the bulb of the thermometer. The water in the flask should be maintained at a level that allows the wick to stay wet.

Black Globe Thermometer

7-41. The black globe thermometer consist of a six inch hollow copper sphere painted flat (matte) black on the outside, containing a thermometer with its bulb at the center of the sphere. The thermometer should have a range of 23 degrees Fahrenheit to 212 degrees Fahrenheit.

Dry Bulb Thermometer

7-42. The dry bulb thermometer is a standard laboratory thermometer. The bulb of the thermometer is shaded from the sun by a white hood.

COMPUTING THE WET BULB-GLOBE TEMPERATURE INDEX

Note. Measure the wet bulb-globe temperature index when the ambient temperature is over 75 degrees Fahrenheit.

7-43. Preparing the wet bulb-globe temperature index kit for operation as follows:

- Open the kit and lift out the thermometer assembly. Check the assembly for deficiencies or damage.
- Wet the cotton wick and fill the plastic flask of the wet bulb thermometer with distilled water.
- Attach the tripod and position the kit approximately four feet off the ground.
- Let the tripod sit undisturbed for at least ten minutes to allow the thermometers to stabilize.

OBSERVE AND RECORD THE READINGS

7-44. After the thermometers have stabilized, observe and record the readings from each of the three thermometers.

7-45. Use the wet bulb-globe temperature index calculator to determine the wet bulb-globe temperature index. Check the tense as follows:

- Locate the dry bulb temperature on the dry bulb thermometer scale.
- Holding the wet bulb scale, slide the dry bulb scale until the wet bulb temperature is directly under the dry bulb temperature.
- Locate the black globe temperature on the bottom scale. Read the wet bulb-globe temperature index from its scale directly above the black globe temperature.

7-46. Use the following mathematical formulas to determine the wet bulb-globe temperature index:

- Multiply the wet bulb temperature by 0.7.
- Multiply the black globe temperature by 0.2.
- Multiply the dry bulb temperature by 0.1.
- Add the products of the three calculations. The sum is wet bulb-globe temperature index.
- Add 10 degrees Fahrenheit if Soldiers are wearing a chemical, biological, radiological, and nuclear protective ensemble for easy work; 20 degrees Fahrenheit for moderate and hard work; and 5 degrees Fahrenheit for wearing body armor in humid climates to the final wet bulb-globe temperature index. Find the heat category associated with wet bulb-globe temperature index you have calculated and report the readings to the commander.

ADDITIONAL RESOURCES

7-47. The United States Army Public Health Command website also provides numerous training and information-related products that cover heat injury related subjects.

Chapter 8
Cold Injury

COLD INJURIES

8-1. Cold injuries are defined as tissue injury produced by exposure to cold. The type of injury depends upon the degree of cold to which the body is exposed, the duration of the exposure, and the environmental factors responsible for the injury. Cold injury can occur at nonfreezing and freezing temperatures. Nonfreezing cold injury is associated with exposure to water and cold. Chilblain, immersion foot, and trench foot are the three common terms applied to nonfreezing cold injuries; a description of each appears below. However, these three terms apply to the same basic injury. The other injury, frostbite, is an injury caused by freezing cold. Hypothermia is a condition caused by prolonged cold exposure and body heat loss.

8-2. Soldiers that are exposed to extreme cold or operate in cold environments for long periods of time are at risk of cold stress. What constitutes cold stress and its effects varies across different geographical regions of the world and the associated climatic conditions. In regions where Soldiers are relatively unaccustomed to winter weather, near freezing temperatures are considered factors for cold stress. Whenever temperatures drop decidedly below normal and as wind speed increases, heat can more rapidly leave the body. These weather-related conditions may lead to serious health problems. Refer to Technical Bulletin Medical 508 and Army Tactics Techniques and Procedures 3-97.11 for more information regarding prevention and management of cold-weather injuries and cold region operations.

SECTION I — BASICS OF COLD INJURY RISK

8-3. The body loses heat by radiation if the outside temperature is lower than the body's temperature. It loses heat by evaporation cooling from sweating. Although this is useful in hot weather it is problematic in cold weather, especially when sweat trapped by clothing diminishes the insulating value of the clothing.

8-4. The normal response to the cold is for the blood vessels in the skin and remote parts of the extremities to constrict and conserve warmed blood for the vital organs. By moving large muscle groups by shifting their position on the ground, they can help shift blood from the central body to the periphery. Actions to aid the body's defenses against the cold include dressing properly for the cold and wet, especially for relatively low level of activity (such as lying on the ground); adding clothing in layers for cold and inactivity and removing layers for increased temperatures and activity to prevent sweating; staying well-nourished so the body produces calories; and drinking plenty of fluids, which is important in maintaining the circulation volume.

8-5. Soldiers do not respond physiologically to cold exposure the same as to heat exposure. The adjustments to cold exposure are less pronounced, slower to develop, and less practical in terms of relieving strain. For this reason, it is more important for leaders to ensure Soldiers are properly clothed for the cold and wet, adjust the uniform requirements depending on activity, and provide for external warming measures (heated shelter).

COLD INJURY FACTORS

8-6. Cold injury, as it involves a military population, in general behaves according to accepted epidemiological principles. A specific agent is present and a variety of environmental and host factors influence the incidence, prevalence, type, and severity of the injury. The three main factors involved in cold injury are—

- Agent.

- Environmental.
- Host.

AGENT FACTORS

8-7. Cold is the specific agent in cold injury and is the immediate cause of tissue damage without respect to the influence of modifying factors. If the effect of cold is considered in terms of body heat loss, the effect of moisture as a conductor of heat is readily apparent; also, the ways in which various host and environmental factors modify the extent and severity of cold injury become clear. Therefore, the effect of cold cannot be evaluated in direct relation to air temperature alone.

ENVIRONMENTAL FACTORS

8-8. Weather is a predominant factor in cold injury. Temperature, humidity, precipitation, and wind modify the rate of body heat loss. Low temperatures and low relative humidity favor development of frostbite. Higher temperatures (just above freezing to 50 degrees Fahrenheit [10 degrees Celsius]), together with moisture, are usually associated with trench foot. Wind velocity accelerates body heat loss under conditions of both coldness and wetness. The effect of low temperatures is intensified as air movement passing the body increases. This can be the result of wind against the body or the effect of a body moving rapidly through the air, such as in running, skiing, or riding in an open vehicle.

8-9. The incidence of cold injury varies greatly according to the type of operations. Units in reserve or in rest areas have relatively few cases of cold injury. On holding missions or on static defense, exposure is greater and a moderate increase in incidence is expected. On active defense or offense, marked increases in cold injuries usually occur. Immobility under fire, prolonged exposure, lack of an opportunity to rewarm and change clothing or carry out personal hygienic measures, fatigue, and a lack of nutrition may be involved.

8-10. Adequate clothing properly worn is essential to survival. Clothing for cold weather has been designed to be worn as an ensemble for protecting the head, torso, and extremities. Failure to wear the total ensemble and inadequate supplies of properly sized clothing are important factors leading to cold injury. The ensemble depends upon the layering principle to conserve body heat. Accordingly, loose layers of clothing with airspace between and under an outer wind- and water-resistant garment provide maximum protection. It is flexible because outer layers may be removed for comfort and efficiency to permit escape of perspiration in higher air temperatures or during strenuous physical exertion. Clothing wet by perspiration loses much of its insulating value. Therefore, care must be taken to prevent perspiration from accumulating in the clothing. In all forms of cold injury, preventing body heat loss by proper protection of the body is as important as wearing efficient head, hand, or footgear. All articles of clothing must be loose enough to avoid constriction.

HOST FACTORS

+8-11. There are many host factors which influence an individual's exposure, susceptibility, or response to cold environments and possible cold injury. These include—

- Age.
- Rank.
- Previous cold injury.
- Fatigue.
- Discipline, training, and experience.
- Psychosocial factors.
- Sex.
- Race.
- Geographic origin.

- Nutrition.
- Activity.
- Drugs and medications.

Age

8-12. Within the usual age range of military personnel, age is not a significant factor.

Rank

8-13. Trench foot and frostbite injuries are higher for Soldiers who perform duties in environments with increased exposure to colder temperatures and moisture because they have greater exposure. The decreased incidence of cold injury among higher ranks is because of a combination of factors, such as experience, leadership, receptivity to training, and significantly less exposure.

Previous Cold Injury

8-14. A previous episode of trench foot, frostbite, or immersion foot greatly increases the individual's risk of another cold injury to the same area.

Fatigue

8-15. Fatigue contributes to cold injury because as personnel become exhausted they fail to carry out simple preventive measures. This occurs more frequently in personnel who have been in combat for 30 days or more without rest. Mental weariness may cause apathy leading to the neglect of needs vital to survival. Frequent rotation of troops from exposure to the elements for even short periods lessens the effects of fatigue.

Discipline, Training, and Experience

8-16. Individual and unit discipline, training, and experience are closely related as they influence the incidence of cold injury. Well-trained and well-disciplined Soldiers profit from combat experience in the cold. They are better able to care for themselves through personal hygiene, care of the feet, change of clothing, exercise of the extremities in pinned-down positions, and similar simple, but effective measures. Preventive measures necessary for survival in the cold must be continuously stressed to the troops, enabling them to cope with these problems.

Psychosocial Factors

8-17. Cold injury tends to occur in passive, negativistic, or hypochondriacs (individuals), who display little muscular activity and who are prone to pay less attention to carrying extra footwear; changing socks when needed; and reducing smoking under combat conditions where cold injury is a threat.

+Sex

+ 8-18. The peripheral cold injury rate for female Soldiers is two times higher than the rate for males.

Race

8-19. African American Soldiers are two to four times more likely to suffer a cold-weather injury than their Caucasian counterparts.

Geographic Origin

8-20. The geographic origin of the individual seems to be a significant factor among Caucasians in the incidence of cold injury. Individuals coming from warmer climates of the United States (including Puerto Rico) where the mean minimum January temperature is above 20 degrees Fahrenheit (below 6.6 degrees Celsius) predisposes to cold injury.

Nutrition

8-21. Poor nutrition contributes to susceptibility to cold injury. Adequately clothed and protected Soldiers living and working in cold climates do not require an increase in caloric intake above that normally provided in the military ration. Individuals who do not eat regularly or do not eat complete, balanced meals are more susceptible to injury.

Activity

8-22. Too much or too little activity can contribute to cold injury. Over activity with rapid and deep breathing can cause the loss of large amounts of body heat. Perspiration trapped in clothing markedly reduces the insulating quality of the clothing. On the other hand, immobility causes decreased heat production with the danger of resultant cooling, especially of extremities.

Drugs and Medications

8-23. Soldiers should be made aware of the effects of smoking in decreasing peripheral circulation and of alcohol ingestion in dilating peripheral vessels. Persons on peripheral vasodilator medications may be at added risk of cold injury due to reduced circulation. Both tobacco and alcohol should be avoided when the danger of cold injury exists.

SECTION II — COLD AND WET (NONFREEZING) COLD INJURIES

COLD AND WET INJURIES

8-24. Cold and wet injuries are classified as nonfreezing cold injury and include chilblains and immersion syndrome (trench foot). It is not unusual for both hypothermia and local cold injuries to occur simultaneously.

HYPOTHERMIA

8-25. Hypothermia is defined as a core temperature below 95 degrees Fahrenheit (35 degrees Celsius), which represents a fall from normal body temperature of about 3.5 degrees Fahrenheit (2 degrees Celsius).

SYMPTOMS

8-26. Intense shivering is one of the first signs of body cooling and requires increased attention from the leadership, because early intervention can prevent development of hypothermia. The symptoms become progressively worse as core temperature falls, and if a Soldier becomes sufficiently cold, shivering may actually decrease or cease, resulting in a decrease in heat production. Neurological changes are manifested by changes in mood and suggest that a person is now clinically hypothermic (less than 95 degrees Fahrenheit). Note that resuscitation efforts have been successful down to core temperatures as low as 60 degrees Fahrenheit. Because life signs at these temperatures are almost impossible to obtain, no one will be pronounced dead until they have been rewarmed; hence the use of the adage, *A person is not dead until they are warm and dead*.

HYPOTHERMIA CLASSIFICATIONS

8-27. Hypothermia is also classified by how it is induced and the relative time frame for induction. These hypothermia classification categories are often called acute (immersion), submersion, subacute, and subchronic.

Acute (Immersion) Hypothermia

8-28. Acute (immersion) hypothermia (partial or full immersion) is induced when conductive heat losses far exceed heat production so core temperature subsequently falls. Furthermore, the shock of sudden cold-water immersion, such as falling through ice, usually induces an initial hyperventilation with a risk of water

aspiration, as well as a sudden fall in blood pressure. After this initial shock, heat loss needs to be minimized by limiting movement and huddling. During the first five minutes of ice-water immersion, it may be possible to self-rescue, but after longer immersions the decreasing body temperature will make it difficult to coordinate movements effectively.

Submersion Hypothermia

8-29. Submersion hypothermia is total submersion of the body in ice-cold water. Cold water may be aspirated, causing fast cooling of the brain and heart. This is prevalent especially in young children. Fast cooling of the brain may have a protective effect, and successful resuscitation has been achieved after 45 to 60 minutes of submersion.

Subacute Hypothermia

8-30. Subacute hypothermia occurs with exposure less severe than cold water immersion (for example, cold air with wind and rain). This type of hypothermia generally develops over many hours or several days because of a variety of reasons. For example, hypothermia associated with physical exertion or substrate depletion would generally fall within this category.

Subchronic Hypothermia

8-31. Subchronic hypothermia is caused by prolonged (days to weeks) exposure to cold temperatures. This may be seen during extended operations or in isolated groups of Soldiers in survival situations. In the civilian community, it is commonly seen in the elderly and malnourished in urban settings.

FIRST AID

8-32. Get the Soldier to a medical facility as soon as possible, hypothermia is a medical emergency and may be fatal. Never assume someone is dead until determined by a medical authority, even if a victim is cold and not breathing. Remove wet clothing, wrap victim in blankets or a sleeping bag, and move indoors. Place another person in sleeping bag as an additional heat source. Minimize handling of the unconscious victim with a very weak and slow heartbeat so as to not induce a heart attack.

PREVENTION

8-33. Avoid cotton clothing in cold-weather environments, wear wool and some synthetic fabrics that provide better insulation properties when dry or wet. Use the buddy system to watch out for signs indicating the onset of hypothermia symptoms. As leaders keep Soldiers moving to warm extremities when performing duties for long periods of time in harsh conditions. Anticipate the need for warming areas for Soldiers exposed to cold conditions and rotate Soldiers off the front line to get warm.

CHILBLAINS

8-34. Chilblains are a nonfreezing cold injury that typically occurs after 1 to 5 hours in cold-wet conditions at temperatures below 50 degrees Fahrenheit (10 degrees Celsius) but above freezing.

SYMPTOMS

8-35. Symptoms of chilblain include small lesions on the skin usually on the tops of the fingers. The Soldier's face, ears, and exposed skin may also show lesions. The lesions are swollen, tender, itchy, and painful. When rewarmed the skin becomes inflamed, red, hot to the touch, and swollen. Often, an itching or burning sensation continues for several hours after exposure. Eventually all symptoms subside. There are no lasting effects from chilblain.

FIRST AID

8-36. First aid for chilblain is to warm affected area with direct body heat. Do not massage or rub affected areas. Do not wet the area or rub it with snow or ice. Do not expose affected area to open fire, stove, or any other intense heat source.

PREVENTION

8-37. Use contact gloves to handle all equipment; never use bare hands. Use approved gloves to handle all fuel, petroleum, oil, and lubricant products. In extreme cold environments, do not remove clothing immediately after heavy exertion; wait until a warmer location can be accessed. Avoid cotton clothing, which holds perspiration, in cold-weather environments. Wear clothing in layers (creating air spaces) to hold maximum body heat; ensuring clothing is fitted properly; reducing the layers of clothing when exercising or working to prevent sweating.

IMMERSION SYNDROME (TRENCH FOOT)

8-38. Immersion syndrome is a nonfreezing cold injury that develops when tissues are exposed to cold-wet conditions—usually between 32 degrees Fahrenheit and 60 degrees Fahrenheit (0 degrees Celsius and 16 degrees Celsius)—for prolonged periods more than 12 hours increases risk usually taking about 3 to 5 days minimum for full onset. It can occur in any tissue but occurs most often in the feet. In extreme cold region environments, individuals who wear vapor barrier boots for long periods with wet socks often develop immersion syndrome.

SYMPTOMS

8-39. The Soldier's feet initially appear swollen and red with a feeling of numbness. The tissue may become pale in more serious injuries. Often, aches, increased pain sensitivity, and infections accompany immersion syndrome.

FIRST AID

8-40. Get medical help immediately. Remove wet and constrictive clothing. Dry and clean tissues gently. Rewarm feet by exposing them to warm air. Do not allow the Soldier to walk on the injured extremity. Do not massage, rub, moisten, or expose affected area to extreme heat or lotions. Do not pop blisters. Evacuate victim to a medical facility.

PREVENTION

8-41. Keep feet clean and dry; change wet or damp socks as soon as possible. Wipe the inside of vapor barrier boots dry at least once per day, or more often as feet sweat. Dry leather boots by stuffing with absorbent material such as paper towels. Soldiers will not sleep with footwear on, for several reasons. Feet need to be dried out overnight to maintain the skin integrity and prevent nonfreezing cold injuries. Also, feet will continue to sweat if boots are worn while sleeping, and the boots cannot dry completely. Boots can be placed inside the sleeping bag to dry out. Boots must not be placed outside in very cold temperatures because the moisture in them can freeze, and cold injuries can occur when placing feet in cold boots.

SECTION III — COLD AND DRY (FREEZING) INJURIES

COLD AND DRY INJURY

8-42. Cold and dry injury causes freezing of cells and tissues and is known as frostbite. As with nonfreezing cold injuries it is not unusual for both hypothermia and local cold injuries to occur simultaneously.

FROSTBITE

8-43. Frostbite occurs when the tissue temperature falls below 32 degrees Fahrenheit. The freezing point of skin is slightly below the freezing point of water because of the electrolyte content of the cells and extracellular fluid, so dry tissue typically freezes around 28 degrees Fahrenheit. However, wet skin freezes around 30 degrees Fahrenheit because the rate of heat loss is much higher with wet skin compared to dry skin. Instantaneous frostbite can occur when the skin comes in contact with super-cooled liquids, such as petroleum, oil, and lubricant; fuel; antifreeze; and alcohol, all of which remain liquid at temperatures as low as -40 degrees Fahrenheit. Contact frostbite can occur by touching cold objects with bare skin, which causes rapid heat loss. Frostbite is most common in exposed skin (nose, ears, cheeks, exposed wrists), but also occurs in the hands and feet because peripheral vasoconstriction can significantly lower tissue temperatures.

DEGREES OF FROSTBITE

8-44. Frostbite is classified into four different degrees, first-degree, second-degree, third-degree, and fourth-degree.

FIRST-DEGREE FROSTBITE

8-45. First-degree frostbite is defined as superficial freezing (*frostnip*), usually produced by a short-duration exposure to cold air or contact with a cold object (for example, a metal door handle).

SYMPTOMS

8-46. Early signs include erythema, edema, transient tingling, or burning sensation. The skin initially has a mottled blue-gray appearance followed by a red appearance with thawing and is hot and dry to the touch. Swelling occurs within 2 to 3 hours of rewarming and may persist for 10 days.

SECOND-DEGREE FROSTBITE

8-47. Second-degree frostbite is defined as injury to the epidermis and superficial dermis.

SYMPTOMS

8-48. The skin appears gray/white and is cold and firm to the touch. There is little pain and loss of sensation, although the range of motion is decreased when skin is frozen. Blisters appear within 12 to 24 hours and need to remain intact, but if they rupture, care must be taken to avoid infection. As the blisters dry, they slough with pink granulation tissue, and there is no permanent tissue loss. Throbbing and aching pain persists for 3 to 10 days post injury.

THIRD-DEGREE FROSTBITE

8-49. Third-degree frostbite is defined as freezing of full skin thickness.

SYMPTOMS

8-50. The blisters that form may be blood filled. There is generalized swelling that subsides after 5 to 6 days. The skin forms a black, hard, dry scab. Burning, aching, throbbing, or shooting pain from the fifth day to 4 to 5 weeks is common. Residual cold sensitivity is common.

FOURTH-DEGREE FROSTBITE

8-51. Fourth-degree frostbite involves the entire thickness of skin and underlying tissue and may include bone. There is no mobility in the frozen tissue. After rewarming, passive mobility returns, but muscle function may remain poor.

SYMPTOMS

8-52. Upon rewarming, the skin has a deep bluish appearance with poor perfusion. Over several weeks, the tissue will slough. In rapidly frozen extremities or freeze-thaw-refreeze injuries, dry gangrene develops with mummification after 5 to 10 days. With slower freezing, demarcation takes much longer to occur, but is usually clear at 20 to 36 days. Some tissue damage is irreversible. However, early surgical intervention is not indicated because there is a high capacity for tissue healing even in those cases in which the original prognosis was poor.

FIRST AID

8-53. Treatment in the field depends on the treatment of other injuries, the possibility of hypothermia or refreezing, and the ease of evacuation. For superficial frostbite, the affected area can be rewarmed at room temperature or with skin-to-skin contact. For deep frostbite, rescuers must move the patient to a warm shelter and keep the patient warm for the duration of the evacuation to the hospital. The injury can be rewarmed using the same techniques or using the warm water-batch technique. Additionally, rescuers must insulate and protect thawed injuries from refreezing during evacuation. Once a tissue has thawed, it must never refreeze. Thawing and then refreezing the injury causes additional damage. First aid should be started immediately, do not thaw frozen areas if treatment will be delayed. Do not massage or rub affected areas. Do not wet the area or rub it with snow or ice. Do not expose affected area to open fire, stove, or any other intense heat source. Evacuate as soon as possible, because frostbite can lead to amputation. If transportation is available, casualties avoid walking on frozen feet. If they must walk, it will be better to keep the feet frozen during evacuation.

Note. Causalities must avoid tobacco products when receiving treatment for frostbite. Tobacco products reduce the flow of blood to extremities.

PREVENTION

8-54. Use contact gloves to handle all equipment; never use bare hands. Use approved gloves to handle all fuel and petroleum, oil, and lubricant products. Avoid cotton clothing, which holds perspiration in cold-weather environments. Keep face and ears covered and dry. Keep socks clean and dry. Avoid tight-fitting clothing especially socks and boots. Avoid the use of tobacco products. Cover all exposed skin when the windchill danger is high.

SECTION IV — OTHER CONDITIONS ASSOCIATED WITH COLD WEATHER

DEHYDRATION

8-55. Dehydration can and does occur in cold-weather operations in large part because the body responds differently to cold stimulus and the need to drink is not manifested in an increased thirst. Due to the shell-core effect, the kidneys sense an increase in blood volume and convert some of the fluid volume to urine. The increase in blood volume in the core may also disrupt the thirst mechanism. Increased urine output in the cold region environment results. Some studies indicate that the thirst sensation in cold weather may be reduced by as much as 40 percent. The effect is that the body continues to lose fluids until the Soldier becomes dehydrated.

SYMPTOMS

8-56. The symptoms of dehydration in cold are the same as for temperate environments. They include dizziness, weakness or fatigue, blurred vision, thirst, and dark, concentrated urine.

FIRST AID

8-57. Replace lost water. Water should be sipped, not gulped and warm fluids are helpful for rewarming the body. Get medical treatment if necessary. **Never** eat snow to replace lost body fluids this can cause a dangerous decrease in body core temperature if you must, then melt the snow and warm up the water first.

PREVENTION

8-58. Consume 3 to 6 quarts of water per day at a minimum and monitor the color intensity of urine output.

CARBON MONOXIDE POISONING

8-59. Carbon monoxide is an odorless, colorless gas, which can cause sudden illness and death. The gas is produced by the combustion of fossil fuels. Carbon monoxide poisoning is caused by the displacement of oxygen by carbon monoxide in the blood stream. Poisoning occurs as a result of inadequate ventilation of exhaust gases from generators, heaters, and vehicles are not provided.

SYMPTOMS

8-60. Headache, confusion, dizziness, excessive yawning, cherry red lips and mouth (in light-skinned individuals); grayish tint to lips and mouth (in dark-skinned individuals) and progresses to unconsciousness and death.

FIRST AID

8-61. Move to fresh air and administer oxygen if available, provide cardiopulmonary resuscitation if needed and evacuate. Mild to severe exposures are treated with oxygen therapy and monitoring carbon monoxide levels.

PREVENTION

8-62. Use only Army-approved heaters in sleeping areas and ensure that personnel are properly trained to operate the heaters. Always post a fire guard when operating a heater in sleeping areas. Never sleep in idling vehicles.

SNOW BLINDNESS

8-63. Snow blindness is the burning of the cornea of the eye by exposure to intense ultra violet rays of the sun. This injury is caused by glare from an ice field or snowfields, especially at high altitude. It is more likely to occur in hazy, cloudy weather than when the sun is shining.

SYMPTOMS

8-64. Eye-pain, redness, watery or gritty feeling in the eyes causing a sensation of grit in the eyes with pain in and over the eyes, made worse by moving the eyeball. Other signs and symptoms are watering, redness, headache, and increased pain on exposure to light snow blindness is prevented by wearing sunglasses in these conditions.

FIRST AID

8-65. Rest in total darkness; bandage eyes with gauze. Evacuate if no improvement within 24 hours.

PREVENTION

8-66. Use sunglasses with side protection in snow-covered environments. Use improvised slit glasses if sunglasses are not available. Slit glasses can be made by cutting or tearing opaque strips of tape and applying them to an existing pair of glasses or by making cardboard glasses and cutting out horizontal slits from each eye area.

SECTION V — COLD INJURY PREVENTION TOOLS

GENERAL GUIDANCE FOR ALL COLD-WEATHER TRAINING

8-67. Cold injuries are preventable except in unusual situations. Successful prevention requires vigorous command emphasis and prior planning in such activities as cold-weather training, and the provision of and access to appropriate cold-weather clothing and equipment.

8-68. Specific preventive measures are directed toward conserving body heat and avoiding unnecessary exposure of Soldiers to cold, moisture, and activities or factors favoring cold injury. These include but are not limited to the following:

- Covering exposed skin (fingers, ears, face) because it is more likely to develop frostbite.
- Wear clothing in layers (creating air space) to hold maximum body heat, ensuring clothing is fitted properly.
- Avoiding wet skin (common around the nose and mouth).
- Utilize the buddy system, inspecting hands, feet, face and ears frequently for signs of frostbite.
- Changing into dry clothing at least daily and whenever clothing becomes wet.
- Washing and drying feet and putting on dry socks at several times a day.
- Consuming 4500 calories per day per Soldier. (This is equivalent to three meal packets in meal, cold weather or three to four meals, ready-to-eat, individual.)
- Consuming three to six quarts of liquid (canteens)/day/Soldier. Warm, sweet drinks are useful for rewarming.
- Considering not using skin camouflage below 32 degrees Fahrenheit because skin camouflage obscures detection of cold injuries.

8-69. These guidelines are generalized for worldwide use. Commanders of units with extensive extreme cold-weather training and specialized equipment may opt to use less conservative guidelines. Cold injury prevention is a command responsibility.

8-70. Cold injuries are preventable except in unusual situations. Successful prevention requires vigorous command emphasis and prior planning in such activities as—

- Cold-weather training.
- The provision of and access to appropriate cold-weather clothing and equipment.

8-71. Specific preventive measures are directed toward conserving body heat and avoiding unnecessary exposure of Soldiers to cold, moisture, and activities or factors favoring cold injury.

METEOROLOGICAL DATA

8-72. Leaders must be familiar with the use of meteorological data such as humidity, temperature, wind, and ground surface conditions which influence the risk of cold injury. Some weather conditions require shortening the exposure time of Soldiers engaged in patrols, guard duty, or vehicle travel in unheated vehicles despite the adequacy of their clothing and equipment. These conditions can frequently be anticipated by using meteorological data and existing weather conditions to predict the hazard for a given period of time.

8-73. Available meteorological data and the information presented in the windchill charts (see table 8-1 on page 8-11 and table 8-2 on page 8-12) can be used by commanders to determine the severity of the environment. This information will enable him to implement timely and appropriate force protection measures.

8-74. Windchill factors are produced by a combination of temperature and wind speed. A windchill factor of -26 degrees Fahrenheit (-32 degrees Celsius) is considered the critical value for equipment and personnel operating in cold weather. The opposite extreme, 120 degrees Fahrenheit (49 degrees Celsius), is the critical value for personnel operating in hot weather. The critical wet bulb-globe temperature index value for personnel operating in hot weather is 90 degrees Celsius. Similar restrictions occur in desert terrain,

where the difference in temperature from day to night may vary as much as 100 degrees Fahrenheit (37 degrees Celsius).

Table 8-1. Windchill chart

Wind speed (mph)	***Actual temperature (degrees Fahrenheit)***											
	50	40	30	20	10	0	–10	–20	–30	–40	–50	–60
	Equivalent chill temperature in degrees Fahrenheit											
CALM	50	40	30	20	10	0	–10	–20	–30	–40	–50	–60
5	48	37	27	16	6	–5	–15	–26	–36	–47	–57	–68
10	40	28	16	3	–9	–21	–33	–46	–58	–70	–83	–95
15	36	22	9	–5	–18	–32	–45	–58	–72	–85	–99	–112
20	32	18	4	–10	–25	–39	–53	–67	–82	–96	–110	–124
25	30	15	0	–15	–29	–44	–59	–74	–89	–104	–118	–133
30	28	13	–2	–18	–33	–48	–63	–79	–94	–109	–125	–140
35	27	11	–4	–20	–35	–51	–67	–82	–98	–113	–129	–145
40	26	10	–6	–22	–37	–53	–69	–85	–101	–117	–132	–148
	LITTLE DANGER				*INCREASING DANGER*			*GREAT DANGER*				

Notes:

Little Danger	Greatest danger from false sense of security.
Increasing Danger	Exposed flesh may freeze within 1 minute.
Great Danger	Exposed flesh may freeze within 30 seconds.

Wind speed of more than 40 miles per hour has little additional effect.

Legend:

mph	miles per hour
–	minus

Table 8-2. Wet windchill chart

Wind speed (mph)	*Air temperature (degrees Fahrenheit)*											
	10	5	0	–5	–10	–15	–20	–25	–30	–35	–40	–45
5	>120	>120	>120	>120	31	22	17	14	12	11	9	8
10	>120	>120	>120	28	19	15	12	10	9	7	7	6
15	>120	>120	33	20	15	12	9	8	7	6	5	4
20	>120	>120	23	16	12	9	8	8	6	5	4	4
25	>120	42	19	13	10	8	7	6	5	4	4	3
30	>120	28	16	12	9	7	6	5	4	4	3	3
35	>120	23	14	10	8	6	5	4	4	3	3	2
40	>120	20	13	9	7	6	5	4	3	3	2	2
45	>120	18	12	8	7	5	4	4	3	3	2	2
50	>120	16	11	8	6	5	4	3	3	2	2	2

Frostbite risk:
Low – freezing is possible, but unlikely (White)
High – freezing could occur in 10 to 30 minutes (Light Gray)
Severe – freezing could occur in 5 to 10 minutes (Dark Gray)
Extreme – freezing could occur in <5 minutes (Medium Gray)

Note: Wet skin could significantly decrease the time that it takes for frostbite to occur.

Legend:
mph miles per hour
– minus
> more than
< less than

COLD INJURY CONTROLS

8-75. At the company or equivalent sized unit-level, the commander can implement a system of cold injury controls to help prevent cold-weather injuries. Each platoon or comparably sized unit should appoint someone in the unit to monitor the factors for cold injury. This individual may be an officer or noncommissioned officer to supervise others in simple but constant preventive activities. Leaders should—

- Check Soldiers to ensure that they have appropriate cold-weather clothing on hand and that it is serviceable.
- Inspect Soldiers daily for personal hygiene and care of their feet.
- Observe for early signs and symptoms of cold injury.
- Ensure that Soldier's socks are changed at appropriate intervals and that all reasonable efforts are made to keep the feet clean and dry.
- Encourage Soldiers to exercise even if only their extremities and ensure that constriction of extremities by clothing, equipment, and footgear is avoided.
- Ensure that Soldiers are using the buddy system to monitor and prevent cold-weather injuries.

THE BUDDY SYSTEM

8-76. Soldiers should be taught to observe their buddy for evidence of cold injury. If blanching of the skin is noted, immediate care will usually prevent the development of cold injury. Holding (not rubbing) a warm hand on the blanched area until it returns to normal color will rewarm a buddy's ear, nose, or cheek. Fingers can be warmed against the skin of the abdomen or in the armpit. Toes can be rewarmed by holding them against a buddy's bare chest or abdomen with care being taken to provide protection from the wind. A symptom of frostbite beginning to develop on fingers and toes is the sudden and complete cessation of

the sensation of cold or discomfort in the part. This is often followed by a pleasant feeling of warmth. If these danger signals are instantly heeded, cold injury can be prevented. Table 8-3 lists recommended preventive measures to decrease the risk of frostbite.

Table 8-3. Preventive measures to reduce the risk of frostbite

Low ***Freezing is possible below 32°F, but unlikely***	***High*** ***Freezing could occur in 10 to 30 minutes***	***Severe*** ***Freezing could occur in 5 to 10 minutes***	***Extreme*** ***Freezing could occur in less than 5 minutes***
Increase surveillance with self- and buddy checks. Wear appropriate layers and wind protection for the work intensity. Cover exposed flesh if possible. Wear vapor barrier (VB) boots below 0°F. Avoid sweating.	Mandatory buddy checks every 20 to 30 minutes. Wear ECWCS or equivalent and wind protection including head, hands, feet, and face. Cover exposed flesh. Wear VB boots below 0°F. Provide warming facilities. Avoid sweating.	Mandatory buddy checks every 10 minutes. Wear ECWCS or equivalent and wind protection including head, hands, feet, and face. Wear VB boots. Provide warming facilities. Work groups of no less than two Soldiers. No exposed skin. Stay active. Avoid sweating.	Be ready to modify activities due to extreme risk. Wear ECWCS or equivalent and wind protection including head, hands, feet, and face. Wear VB boots. Provide warming facilities. Keep task duration as short as possible. Work groups of no less than two Soldiers. No exposed skin. Stay active. Avoid sweating.
Notes: Wet skin could significantly speed the time for frostbite to occur. Immersion syndrome (trench foot) can occur at any temperature. Always keep feet warm and dry.			
Legend: °C degrees Celsius ECWCS extended cold-weather clothing system °F degrees Fahrenheit VB vapor barrier			

This page intentionally left blank.

Chapter 9

Toxic Industrial Material Hazards

TOXIC INDUSTRIAL MATERIALS

9-1. Toxic industrial materials is the generic term that refers to chemical, biological, or radioactive and described as toxic industrial chemical, toxic industrial biological, or toxic industrial radiological. Toxic industrial materials can be in gas, liquid, or solid form (include particles), though those of particular concern tend to be gases because gas spreads easily. Some examples of common toxic industrial materials include—

- Ammonia.
- Chlorine.
- Hydrogen cyanide.

9-2. Exposures to toxic industrial materials can result from accidental releases, collateral damage from explosions/attacks near stored chemicals, or intentional dispersion with improvised explosive devices such as improvised explosive devices. Insurgents in Iraq have used chlorine gas tanks packaged with improvised explosive devices. Toxic industrial materials of concern can be found almost anywhere, but primarily in—

- Chemical plants.
- Industrial manufacturing facilities.
- Wastewater treatment plants.
- Chemical/waste storage facilities/landfills, laboratory settings.
- Large fuel storage areas.
- Major transportation centers including the vehicles (trains, barges, and so forth).

POTENTIAL HEALTH EFFECTS

9-3. The health effects of exposure to toxic industrial materials can vary and depend on the type of chemical, route of entry into the body, the amount of the agent, and the length of exposure. Some bodies may have unique reactions to certain toxic industrial materials and some may have no reaction at all. Potential symptoms of exposure include immediate or short–term (acute) health effects that include coughing, difficulty breathing, and/or irritation of the nose, mouth, throat, eyes, or skin. Acute exposure to certain toxic industrial materials in high concentrations can cause death.

TOXIC INDUSTRIAL MATERIAL CLASSIFICATIONS

9-4. Toxic industrial materials are classified according to their physical state or chemical characteristics. Classification is important in determining the route of exposure.

GAS

9-5. Gases are a state of matter in which material has a very low density and viscosity can expand and contract greatly in response to changes in temperature and pressure; is easily diffused into other gasses; and is readily and uniformly distributed throughout any container. A gas can be changed to a liquid or a solid state only by the combined effect of increased pressure and decreased temperature.

LIQUID

9-6. Liquids are a state of matter in which the substance is a free-flowing, formless fluid. A liquid takes many forms depending on environmental conditions such as—

- Vapors—the gaseous form of substances which are normally in a solid or liquid state at normal room temperature and pressure.
- Mists—the suspended liquid droplets generated by condensation from the gaseous to the liquid state or by a liquid breaking up into a dispersed state by splashing, foaming or atomizing.

SOLID

9-7. A state of matter characterized by particles arranged such that their shape and volume are relatively stable—

- Fumes are an airborne dispersion consisting of minute solid particles arising from heating a solid such as lead. This physical change is often accompanied by a chemical reaction, such as oxidation. Fumes flocculate and sometimes coalesce.
- Dust, solid particles generated by handling, crushing, grinding, impacting, detonating, and decrepitating materials. Dust does not tend to flocculate, except under electrostatic forces. These particles do not tend to diffuse in the air, but settle under the influence of gravity.

CAUTION

Failure to thoroughly read the safety data sheets or labels on chemicals for danger when using them may result in injury to unit field sanitation team members and unit personnel.

ROUTES OF ENTRY

9-8. Toxic industrial materials can enter the body by various routes. The body's response to toxic industrial chemicals may vary markedly depending on the specific route of entry. Common routes of entry include—

- Inhalation.
- Absorption.
- Ingestion.
- Injection.

INHALATION

9-9. Inhalation occurs when gases, vapors, and aerosols are introduced into the respiratory tract through normal breathing. Some toxic chemicals may produce acute effects that are quickly recognized by those exposed. Other chemicals may cause chronic effects which may take many years to develop.

ABSORPTION

9-10. Absorption occurs when liquid droplets and solid particles come in contact with the skin, eyes, and mucous membranes. The most common occupational disease seen is dermatitis. Contact dermatitis may be caused by irritation or allergic sensitization. Systemic poisoning can also result from skin absorption.

INGESTION

9-11. Ingestion occurs as a result of eating or smoking with contaminated hands, contaminated utensils, or in contaminated areas.

INJECTION

9-12. Injection occurs when contaminates are introduced into the body by high-pressure air or from liquid lines rupturing, or from puncture wounds caused by contaminated objects.

CHEMICAL ACTIONS AND EFFECTS

9-13. A detailed discussion of all chemical actions and effects that a Soldier may encounter is neither possible nor necessary for purposes of the unit field sanitation teams. Instead, chemicals are discussed according to their general biological actions. Checking (if available) the safety data sheets will provide information regarding the dangers of and the chemical actions and effects of a given material. These effects are generally classified as follows:

- Irritants.
- Asphyxiants.
- Anesthetics.
- Systemic poisons.
- Carcinogens.

IRRITANTS

9-14. Irritants are materials that cause inflammation of mucous membranes with which they come in contact. Many irritants are strong acids or alkalis that are corrosive to nonliving things; however, they cause inflammation to living tissue. Examples are sulfur dioxide, acetic acid, formaldehyde, formic acid, sulfuric acid, iodine, ozone, and oxides of nitrogen.

ASPHYXIANTS

9-15. Asphyxiants are materials that deprive the respiratory tissues of oxygen; they do not damage the lungs. Simple asphyxiants are gases, which when present in sufficient quantities, exclude an adequate oxygen supply. Examples are nitrogen, nitrous oxide, carbon dioxide, hydrogen, helium, methane, and ethane. Chemical asphyxiants are materials which have the ability to render the body incapable of using an adequate oxygen supply. Two classic examples are carbon monoxide and cyanide.

ANESTHETICS

9-16. Anesthetics are agents whose main toxic action is their depressant effect upon the central nervous system, particularly the brain. The degree of anesthetic effect depends upon the effective concentration in the brain as well as upon the specific makeup of the contaminant.

SYSTEMIC POISONS

9-17. Systemic poisons cause damage to internal organs such as the liver, kidney, central nervous system, or the cardiovascular system. For example, carbon tetrachloride produces necrosis of the liver.

CARCINOGENS

9-18. Carcinogens are materials that have demonstrated that they cause cancer or are suspected of causing cancer.

COMMONLY ENCOUNTERED TOXIC GASES AND LIQUIDS

9-19. The following are some of the most common sources of toxic gases and chemicals that Soldiers will encounter in the performance of their duties.

CARBON MONOXIDE

9-20. Carbon monoxide is a poisonous, colorless, odorless, tasteless, and nonirritating gas. Carbon monoxide is a deceptive hazard, in that its presence may go undetected. Carbon monoxide is a common industrial hazard resulting from the incomplete burning of natural gas and any other material containing carbon such as jet propulsion fuel, oil, propane, coal, or wood. The most common sources of exposure for Soldiers is through the use of internal combustion engines and space heaters using fossil fuels.

9-21. Carbon monoxide is harmful when breathed because it displaces oxygen in the blood and deprives the heart, brain, and other vital organs of oxygen. Large amounts of carbon monoxide can overcome a Soldier in minutes without warning causing him to lose consciousness and suffocate. Besides tightness across the chest, initial symptoms of carbon monoxide poisoning may include headache, fatigue, dizziness, drowsiness, or nausea. Sudden chest pain may occur in people with angina. During prolonged or high exposures, symptoms may worsen and include vomiting, confusion, and collapse in addition to loss of consciousness and muscle weakness. Symptoms vary widely from person to person. Carbon monoxide poisoning may occur sooner in those most susceptible: young children, elderly people, people with lung or heart disease, people at high altitudes, or those who already have elevated carbon monoxide blood levels, such as smokers. Also, carbon monoxide poisoning poses a special risk to fetuses. Carbon monoxide poisoning can be reversed if caught in time. But even if you recover, acute poisoning may result in permanent damage to the parts of your body that require a lot of oxygen such as the heart and brain. Significant reproductive risk is also linked to carbon monoxide.

9-22. Carbon monoxide interferes with the supply of oxygen to the tissues of the body. Normally, inhaled oxygen is transferred in the lungs to hemoglobin, which is present in all red blood cells. Hemoglobin then transports oxygen, by way of the bloodstream, to the tissue cells where transfer takes place. The affinity of hemoglobin for carbon monoxide is 250 times greater than it is for oxygen. When carbon monoxide combines with hemoglobin, the transport of oxygen to the tissue cells is blocked. Without oxygen, cells cannot live, and when the concentration of carbon monoxide is great enough, death occurs.

9-23. The most common and most easily recognized exposure to carbon monoxide is in the motor pool maintenance shops and in areas where space heaters are used. Whenever vehicle engines are operating, a method of disposing of the carbon monoxide laden exhaust must be used. This is best accomplished by a combination of natural ventilation and mechanical tailpipe extension systems that carry the exhaust outside the structure. Any space heated by a carbon fuel heater must be ventilated by fresh air; ensure that windows are slightly open.

HYDROGEN CHLORIDE

9-24. Hydrogen chloride is a highly irritating gas that forms with water to produce hydrochloric acid. This acid will irritate the mucous membrane, particularly the eyes, throat, and lungs. It can cause a tissue burn and flu-like lung injury.

9-25. Hydrogen chloride is produced as an exhaust from rocket systems, such as a shoulder-fired rocket, or from vehicle-mounted rocket systems. The development and use of these highly mobile weapon systems has greatly increased the potential for exposure to this hazard.

9-26. The most common exposure to hydrogen chloride occurs during the firing process of these weapon systems. Remaining upwind of the exhaust emission and, when necessary, holding one's breath until the gas cloud passes will limit the exposure.

BORE/GUN GASES

9-27. Weapons systems, such as tanks and artillery, can produce large quantities of toxic gases when fired. The propellants produce carbon monoxide gas, lead fumes, and other toxic by-products.

9-28. Effects on the body from this exposure will be much the same as effects produced from exposure to hydrogen chloride and carbon monoxide.

9-29. Exposure will be greatly reduced by using onboard ventilation systems and keeping the bore evacuator on larger weapon systems well maintained.

LIQUID CHEMICALS

9-30. The most widespread and some of the most dangerous, occupational hazards are created by liquid chemicals, such as solvents. These chemicals may present hazards from the use of the liquid itself, as a vapor of the liquid, or as a mist of the liquid. The vast majority of liquid chemicals found in the industrial workplace are organic compounds; these compounds contain carbon. They are found in plant and animal tissues and in materials, such as petroleum and coal, which result from the breakdown of living substances. Lubricants, solvents, fuels, and many insecticides are but a few of the hundreds of different compounds in use and new ones are constantly being produced. These chemicals are used in the course of most industrial-type jobs. Because of their widespread use and their harmful properties, organic compounds present significant military occupational hazards.

9-31. It would be virtually impossible to list all the possible occupations or industrial-type operations in which exposure to liquid chemicals occurs, since so many occupations or industrial processes use these chemicals in one way or another. There are many military situations in which Soldiers are exposed to potentially hazardous organic compounds in liquid form. Many different solvents and fuels are used in military operations. Vehicle and weapons maintenance requires grease, oil, and other lubricants. Field sanitation teams use premixed insecticides. Engineers and preventive medicine personnel handle insecticide concentrates.

9-32. The bodily effects of liquid chemicals vary widely, depending on the chemical involved. The effects on the skin, nervous system, liver, and those leading to cancer are discussed below.

SKIN DISEASE

9-33. In terms of numbers, occupational skin diseases (dermatosis) are by far the most important of the occupational diseases. Although occupational skin conditions may cause considerable loss of time from work, usually they are not severe enough to cause permanent disability.

9-34. The healthy skin has certain barriers against injury. The dead surface cells resist most chemicals, while the oily secretions of the skin form a protective covering against some chemicals. Deeper skin cells prevent the loss of water from the skin.

9-35. The occurrence of occupational dermatosis depends mainly on the specific chemicals to which the skin is exposed and the length of the exposure. The presence of other skin diseases lowers resistance to exposure. Personal cleanliness is important, since failure to wash the skin or to remove dirty clothing increases the length of exposure. The type of skin is an important factor, too. People with oily skin are more likely to develop infected sweat glands, whereas those with dry skin are more affected by drying agents such as detergents. Skin disease is more prevalent in the summer than in the winter due to the fact that less clothing is worn and to the presence of sweat.

9-36. Chemicals on the skin may cause either, an irritant effect, a sensitizing effect, or both. A chemical that is classified as a skin irritant will cause irritation to any individual's skin, if left in contact with the skin long enough. Most organic compounds are considered skin irritants, although they vary greatly in strength. Chemical agents which do not cause skin disease on first contact but do so after five days or more of continuous or repeated contact are called sensitizing chemicals. This is a type of allergy which develops only in a small number of exposed people, depending on the chemical involved and the individual's sensitivity to that substance. Examples of chemicals capable of sensitizing are the explosives, photographic developers, epoxy mixtures, some insecticides, and some fungicides.

CENTRAL NERVOUS SYSTEM EFFECTS

9-37. It is difficult to summarize the toxic effects of organic solvents, since they vary greatly in their effects on human tissue. There is one property, however, which is common to practically all organic solvents. It is their ability to produce a loss or disturbance of sensation and sometimes a loss of consciousness. Sudden large exposures to concentrated vapors of some solvents can lead to instant unconsciousness and even death. With lower levels of exposure, less severe symptoms will be experienced. Headaches, dizziness, nausea, vomiting, and convulsions may occur. Even lower exposures may produce enough drowsiness to create an accident hazard under certain conditions. Insecticides are

good examples of these toxic properties; for example, the insecticide, malathion, an organic compound, exerts its toxic action on that part of the central nervous system which controls breathing, digestion, muscle strength, vision, and sweating. Thus, excessive exposure to these chemicals results in respiratory difficulty, vomiting, muscle weakness, blurry vision, and excessive sweating, which are but a few of the many symptoms that may be present.

CANCER-PRODUCING LIQUID CHEMICALS

9-38. Some liquid chemicals are known to cause cancer. Soldiers who handle certain organic dyes must exercise caution by following the directions for their use.

PREVENTION AND CONTROL

9-39. The best defense against toxic industrial material hazards is using the fundamental principles of contamination avoidance. Avoid the hazard by deterring or preventing it from being released; or know exactly where, what, and how much toxic industrial material hazards are present in the area of operations. Soldiers should not enter the contaminated area unless it is vital to mission success. For more information, refer to ATP 3-11.32, ATP 4-02.7, and ATP 4-02.85.

9-40. Current military chemical detectors and protection systems are not generally adequate to quickly detect commercial chemicals in the event of a release. In the event of exposure or a release, Soldiers should—

- Mask and quickly sound the alarm and quickly move as far upwind as possible, avoiding contact with liquid contaminated surfaces when possible.

CAUTION

Standard issue military protective masks are not designed to protect Soldiers from most toxic industrial material hazards. The field protective mask should be considered as an escape device only, and Soldiers exposed to unidentified toxic industrial materials should leave the contaminated area as rapidly as possible. Self-contained breathing apparatus or supplied air respirators protect the respiratory tract against most toxic industrial materials and provide an additional protection against low oxygen tensions in the ambient environment due to displacement of air by some toxic industrial materials, especially in enclosed spaces.

- When safe, Soldiers should evaluate the need to decontaminate their eyes, skin or clothing.
- If the eyes or skin are contaminated and especially if they feel like they are burning or show signs of irritation, immediately flush with large amounts of water.
- Carefully remove and dispose of contaminated clothing.
- Replace the canister on protective mask worn during the exposure event.
- Seek medical treatment and evaluation for effects that resulted in burns or moderate to severe irritation, particularly if you have breathing difficulties. This could be a sign of more serious delayed effects.
- Notify higher headquarters using unit standard operating procedure.

Note. Combat uniforms provide general skin protection against some toxic industrial materials and vapors. However, if liquid or aerosol droplet hazards are present, they may penetrate the uniform and cause skin irritation or burns. Soldiers exposed only to toxic industrial material vapors that have no skin or eye irritation do not generally need to be decontaminated, though it may be prudent to change their clothing.

REPORTING TOXIC INDUSTRIAL MATERIAL EXPOSURE

9-41. In the event that Soldiers have been exposed to toxic industrial materials while deployed, they will be afforded additional postdeployment aftercare treatment and evaluation as indicated. For more information on postdeployment health assessment process, see Department of Defense Instruction 6490.03. Exposures to occupational and environmental health hazards that may result in some clinically relevant adverse health outcomes to exposed individuals as determined by an appropriate medical/health professional should be reported. Combatant commands will forward copies of the reports to the Defense Occupational and Environmental Health Readiness System for archiving.

This page intentionally left blank.

Chapter 10
Noise Hazards

NOISE

10-1. Noise is simply defined as unwanted sound, whether it is a pure tone, a complex of tones, or unwanted speech or music. In actual practice, the term is usually applied to sounds which have a complex character acoustically, such as those containing a large number of separate frequency components that extends over a wide range of frequencies and which are not normally generated to convey meaning or information.

10-2. Hazardous noise is part of the military environment; therefore, good hearing cannot be taken for granted in the Army. Preservation of the ability to hear low-level sounds or speech is essential to combat readiness. A Soldier's unprotected hearing can be damaged permanently, even before completing basic training. The increased demand for weapon systems to possess greater speed, range and firepower compounds the problem with higher and more hazardous noise levels.

FACTORS DETERMINING THE DEGREE OF HAZARD

10-3. There are four properties or characteristics of noise which determine whether a given noise is likely to be hazardous to workers' hearing. These characteristics are—

- Frequency.
- Intensity.
- Nature of the noise.
- Exposure duration.

FREQUENCY

10-4. The frequency of a noise determines its pitch, which is that attribute of an auditory sensation in which sounds may be ordered on a scale extending from low to high. High-frequency (high-pitched) noises are more dangerous to hearing than low-frequency (low-pitched) noises.

INTENSITY

10-5. The relative loudness of the noise, expressed in decibels, will play a large part in determining the degree of hazard; the louder the noise, the greater it's potential for causing hearing loss.

NATURE OF THE NOISE

10-6. Noise may be continuous or intermittent. It may be steady or made up of a series of impact or impulse noises.

EXPOSURE DURATION

10-7. The longer the exposure, the greater the damage to the hearing mechanism. Exposure duration is usually expressed in terms of a time-weighted average, which takes into account both intensity of noise and duration of the exposure.

TYPES OF NOISE

10-8. There are two types of noise—steady noise and impulse noise.

STEADY NOISE

10-9. Steady noise is noise that does not significantly change in intensity or frequency with time such as that produced by equipment and vehicles. Examples of steady noise sound levels for various types of equipment are shown in table 10-1.

Table 10-1. Examples of steady noise

Type of equipment	*Sound level dB*
5 kW Tactical quiet generator	80
15 kW Tactical quiet generator	84
Chinook helicopter	102.5
Blackhawk helicopter	106
Apache helicopter	104
Kiowa helicopter	101

Legend:
dB Decibels
kW kilowatt

IMPULSE NOISE

10-10. Impulse noise (also referred to as impact noise or blast overpressure), is noise that is characterized by a sharp rise in intensity followed by a rapid decline in intensity, such as that produced by weapons fire. It cannot be measured accurately with an ordinary sound level meter. Examples of impulse noise sound levels for various types of equipment are shown in table 10-2.

Table 10-2. Examples of impulse noise

Type of equipment	*Sound level dB*
5.56mm rifle	157
9mm pistol	157
5.56mm squad automatic weapon	159.5
7.62mm machine gun fired from a HMMWV	155
M2 HB 50 caliber machine gun	153
Hand grenade	164.5
105mm towed howitzer at charge 8	183
155mm towed howitzer firing M203 propellant	178
81mm mortar	178.8

Legend:
dB Decibels
kW kilowatt
mm millimeter
HMMWV high mobility multipurpose wheeled vehicle
HB heavy barrel

EFFECTS OF NOISE ON THE EAR

10-11. Exposure to excessive noise for extended periods of time overactivates the hairs and hair cells in the inner ear causing injury. Such injury to the *organ of Corti* usually leads to permanent loss of hearing. There is no known treatment for such hearing loss. However, depending upon the duration of the exposure to excessive noise, hearing loss may only be temporary in nature. This acute partial loss of hearing has the most significant possible impact to the combat mission because it may render a Soldier combat ineffective.

10-12. Initial hearing loss due to noise exposure will result in hearing impairment in the frequency range above those frequencies important to understanding speech. As a result, early damage is seldom noticed by

individuals. Continued exposure will lead to progressively greater damage, including loss of ability to hear frequencies of sound necessary to understand speech.

10-13. Other physiological effects which are produced by excessive exposure to noise include nausea and headaches. In many cases the reflex responses of the individual are affected. Psychological stress from noise may be manifested in the form of fatigue, inability to function, annoyance, and distraction.

REGULATORY GUIDANCE

10-14. Guidance for establishing and conducting an effective hearing conservation program is summarized in Department of Army Pamphlet 40-501, as well as in applicable portions of Army Regulation 40-5 and Department of Army Pamphlet 40-11.

10-15. Information on hearing protective devices, including the need and requirement for noise exposed military and civilian personnel to wear them, their fitting, maintenance, issue, use and ordering is presented in United States Army Center for Health Promotion and Preventive Medicine Technical Guide Numbers 41 and 175.

IMPORTANCE OF HEARING PROTECTION

10-16. Good hearing is critical to the success of the Army mission, both in offensive and defensive operations and is essential for—

- Aiding in small arms accuracy, weapons identification and target acquisition.
- Determining the position, number and type of friendly or enemy vehicles.
- Hearing enemy movement.
- Hearing radio messages and verbal orders.
- Hearing the activation of perimeter alarms.
- Localizing snipers.
- Locating patrol members.
- Recognizing foreign language being spoken.

10-17. Hearing loss caused by loud noise becomes permanent and is not medically treatable. Impaired hearing can cause serious or fatal mistakes at work or during training and in combats.

SIGNS OF HEARING LOSS

10-18. Two early signs of hearing loss may be ringing ears and speech that sounds muffled. Speech and other important sounds have to be louder to be heard or understood.

Note. The report of some weapons is so loud that a single, unprotected exposure can cause severe hearing loss.

WHEN HEARING PROTECTIVE DEVICES ARE NEEDED

10-19. Hearing protection is required where noise hazards exist in training and in combat. With proper protection, hearing loss is no longer an inevitable consequence of combat.

HEARING LOSS PREVENTIVE MEDICINE MEASURES

10-20. There are several personal protective devices available to lessen the risk of hearing loss. These devices primarily consist of various types of earplugs and noise muffs. An important consideration in selecting these devices is their ability to be worn comfortably and consistently when hearing protection is required.

10-21. When Soldiers are subjected to extremely high, steady-state noise levels (greater than 103 decibel, A-weighting time-weighted average or greater than 165 decibel, A-weighting), earplugs and earmuffs must be worn together to prevent hearing loss.

10-22. The role of the unit field sanitation teams is to ensure that hearing protection devices whether they be earplugs or earmuffs are available for issue to Soldiers as needed. They are also responsible for educating Soldiers on the hazards of high intensity noise and potential hearing loss if protective measures are not taken.

EARPLUGS

10-23. The hearing protection devices shown in this publication are examples of those currently available that may be issued to Soldiers. Alternative hearing protective devices may be issued upon recommendation from the local hearing program manager.

ADVANTAGES OF WEARING EARPLUGS

10-24. Wearing earplugs offers many advantages for Soldiers operating in the field. These advantages are—

- Prevent hearing loss when properly fitted and consistently worn.
- Are compatible with glasses, earrings, hairstyles and different types of headgear.
- Are not usually affected by external temperature or environment.
- Represent the most economical form of hearing protection.
- Do not usually interfere with work operations.
- Are easily carried or stored on the person for ready availability.

DISADVANTAGES OF WEARING EARPLUGS

10-25. Although insignificant when compared to the advantages of wearing earplugs some of the disadvantages do exist. Earplugs can—

- Be lost or misplaced.
- Work loose when the wearer talks, and must be reseated periodically.
- Require slightly more time to fit than for some other types of hearing protection devices such as earmuffs.
- Contribute to a problem of impacted wax in the ear canal.
- Not be worn safely in an unhealthy ear; infection may result from failure to keep earplugs clean.
- Require that gloves or helmets, when worn, need to be taken off before inserting or removing earplugs.
- Greater variance in attenuation (protective value) is noted with earplugs when compared to earmuffs.

TRIPLE-FLANGE EARPLUG

10-26. The triple-flange earplug (see figure 10-1) is made of a soft, resilient material that is premolded.

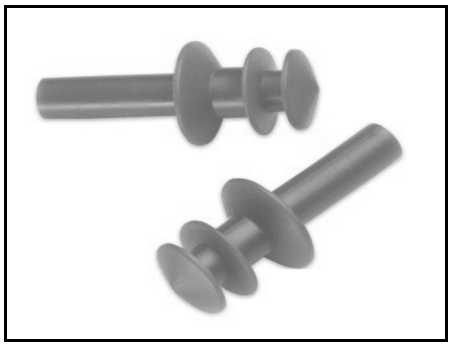

Figure 10-1. Triple-flange earplug

10-27. The three sizes, their color code and typical size distribution (for ordering purposes) among users are listed in table 10-3.

Table 10-3. Triple-flange earplug, color, size, and distribution information

Size and color	*Size distribution*
Small (green)	5 percent
Regular (orange)	75 percent
Large (blue)	20 percent
Note: In a population that includes a high proportion of women, young men and/or African-American men, some shift toward the smaller sizes may occur. An advantage of this plug is that it requires less time to fit than some of the other insert earplugs.	

QUAD-FLANGE EARPLUG

10-28. The quad-flange earplug (see figure 10-2) is made from an ultra-soft polymer that is easy to insert and comfortable to wear. This plug is available only in one size (one-size fits-many) in the color blue.

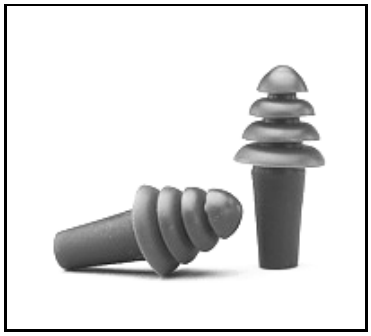

Figure 10-2. Quad-flange earplug

NONLINEAR EARPLUGS (DOUBLE- AND SINGLE-ENDED)

10-29. Nonlinear earplugs have two settings (see figure 10-3). In the open setting, low-intensity speech sounds pass through with minimal sound reduction, but high-intensity impulse noise (such as weapons fire), is reduced significantly. In the closed setting, all sounds are reduced for maximum hearing protection.

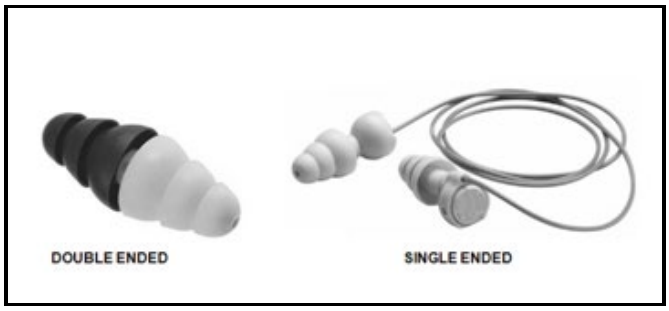

Figure 10-3. Nonlinear double- and single-ended earplugs

FOAM (HAND-FORMED) EARPLUG

10-30. The foam, hand-formed earplug is made of polyvinyl chloride foam (see figure 10-4 on page 10-6). Unlike fitted earplugs, hand-formed earplugs do not require fitting by medically trained personnel.

Figure 10-4. Foam, hand-formed earplug

EARPLUG CARRYING CASE

10-31. The earplug carrying case (see figure 10-5) keeps earplugs dry and when worn on the uniform, keeps earplugs readily available for use. Earplug fitting instructions and general information are inscribed on the case.

Figure 10-5. Earplug carrying case

EARMUFFS

10-32. Circumaural hearing protectors, or earmuffs, are worn over the ears and held in place by the tension of a headband. There are two factors that determine earmuff effectiveness—headband tension and earcup fit. When headband tension decreases, through normal wear or periodic user adjustment, sound attenuation decreases. When the earcups do not seal over the ears, their effectiveness is also compromised.

PROPER WEAR OF EARMUFFS

10-33. In some models, the headband can be worn in several positions, including the back of the head, under the chin or over the top of the head (see figure 10-6).

Figure 10-6. Type II earmuffs

POTENTIAL PROBLEMS USING EARMUFFS

10-34. Eyeglasses with wide temples may prevent a good acoustical seal and be uncomfortable when worn in combination with earmuffs. Even small air leaks permit sound to enter the ear canal and reduce attenuation capability. Therefore, thin or narrow temples are usually preferable.

ADVANTAGES OF EARMUFFS

10-35. Earmuffs are convenient and practical for intermittent exposures. They can be easily put on or removed, even when wearing bulky gloves. Most individuals receive some degree of noise reduction with them, irrespective of any prior instruction regarding their use. Compared to earplugs, they provide less variance in attenuation (protective) levels. Less time and expertise are required in the fitting process and one type of noise muff fits most adult heads.

10-36. Monitoring for compliance and proper use is easier for supervisors—

- When worn in cold weather, their construction and fit can keep ears relatively warm.
- They can be worn in the presence of minor ear infections.
- Problems of impacted earwax and stimulation of the cough reflex are avoided.
- Unlike earplugs, earmuffs are not as easily lost or misplaced.

DISADVANTAGES OF EARMUFFS

10-37. The most common disadvantages associated with earmuffs are that they—

- Are bulky and difficult to carry around when not used.
- Can interfere with work operations in close quarters.
- Are incompatible with certain types of required headgear.
- Are unsatisfactory in hot, humid environments.
- Earmuffs are more difficult to maintain and clean than earplugs.

TACTICAL COMMUNICATION AND PROTECTION SYSTEMS

10-38. Tactical communications and protective systems contain talk-through capabilities and can connect to at least one radio and/or an intercom. The single-channel version can interface with one radio or the vehicle intercom. The dual-channel version can connect to two radios or one radio and the vehicle intercom. External microphones allow for perception of environmental sounds and process sound independently to better enable localization such as the ability to locate a sound source. Some devices use external voice microphones for out-going communications while other devices use internal microphones located in the external ear canal. Advantages of the internal microphones include elimination of the external boom microphone and reduction of background noise due to the placement of the microphone

inside the ear canal. An active noise reduction circuit reduces noise and can improve speech understanding in high-noise environments. The tactical communications and protective systems come in two varieties—in-the-ear devices and over-the-ear devices.

Chapter 11

Exercise Collapse Associated with Sickle Cell Trait

SICKLE CELL TRAIT

11-1. Sickle cell trait (SCT) is a genetic condition that occurs when a person inherits one sickle cell gene and one normal hemoglobin gene. However, a person with SCT usually does not have any of the symptoms of sickle cell disease (SCD), which results from a hemoglobin gene mutation that affects the size and shape of red blood cells. This mutation causes deformity of the red blood cells, which become sickle or crescent shaped, and affects the body's ability to transport oxygen. For more information on SCT and SCD refer to the National Institute of Health website.

11-2. Service members with SCT can typically participate fully in any physical activity; however, under certain circumstances, Service members with SCT may suffer negative effects such as muscle weakness, pain, and collapse.

11-3. This collapse is termed Exercise Collapse Associated with Sickle Cell Trait (ECAST). Leaders will consider ECAST as a cause of collapse in Service members because the relative risk of death is significantly higher in Service members with SCT than those without. However, early recognition and proper treatment of ECAST can increase survival and decrease complications. For more information on ECAST refer to the American Medical Society for Sports Medicine website.

RISK FACTORS

11-4. The following is a list of preexisting medical conditions and environmental factors that may increase the likelihood of an ECAST episode:

- Poor hydration.
- Exercise-induced asthma.
- Dietary supplements containing stimulants.
- Excessive heat exposure.
- High altitude.
- High humidity.
- Inadequate rest between intense exercise periods (e.g., prolonged wind sprints).
- Intense exercise for an extended period.
- Pre-exercise fatigue due to illness.
- Returning from prolonged leave after little physical activity.
- Inadequate acclimatization to environment.

SIGNS AND SYMPTOMS

11-5. Service members experiencing ECAST may have the following signs and/or symptoms:

- Increasing pain and weakness in muscles, especially the large muscles of the legs, buttock(s), and low back.
- Muscle tenderness.
- Slumping to the ground.
- Rapid breathing.
- Slightly elevated body temperature (usually less than 103 degrees Fahrenheit).

11-6. Some of the differences between the signs and symptoms of ECAST and other causes of exercise related collapse include—

- Service members with ECAST will have soft, weak muscles while Service members with muscle cramps will have firm, tight muscles.
- Service members with cardiac issues experiencing an ECAST event may not be able to speak or think normally.
- Service members with ECAST will have a slightly elevated body temperature while Service members experiencing exertional heat stroke will have a core body temperature above 104 degrees Fahrenheit.
- Service members with ECAST will usually be able to speak and think normally while Service members suffering from heat illness may present as confused.

PREVENTIVE MEASURES

11-7. To prevent ECAST, early identification of SCT in Service members is needed. This is done with a simple blood test. Defense Health Agency (DHA)-Procedural Instruction (DHA-PI) 6025.14. *Active Duty Service Member (ADSM) Erythrocyte Glucose-6-Phosphate Dehydrogenase (G6PD) Deficiency and Sickle Cell Trait (SCT) Screening;* Department of Defense Instruction 6465.01, *Erythrocyte Glucose-6-Phosphate Dehydrogenase Deficiency (G6PD) and Sickle Cell Trait Screening Programs*; and ALARACT 094/2020, *Implementation of Army Sickle Cell Trait (SCT) Screening of All Soldiers* establish the Department of Defense's, DHA's, and the Army's procedures to implement erythrocyte G6PD deficiency and SCT screening at—

- Entry to the Military Services (at appointment, enlistment, or induction).
- Pre-deployment.
- Other points as indicated for validation of results.
- Acclimate to the altitude or temperature at which training will occur.
- Exercise for shorter time periods and with less intensity during hot and/or humid conditions.
- Hydrate before, during, and after exercise.
- Understand the signs and symptoms of ECAST. If any symptoms appear, report immediately to Holistic Health and Fitness staff, leadership, and/or health care personnel.

COMMAND RESPONSIBILITIES

11-8. Commanders will ensure that—

- Every Service member in their command has been screened for sickle cell trait.
- Every Service member with a positive SCT screening is issued and wears a red medical warning tag and receives a formal counseling from a unit or medical treatment facility (MTF) health care provider to discuss SCT-positive result.
- During the counseling, the Service member receives educational information that includes—
  - Erythrocyte G6PD and SCT deficiency diagnosis, causes, complications, treatment, and strategies to mitigate symptoms.
  - Materials and resources that enable the Service member to self-identify symptoms experienced during exercise and when to seek immediate medical attention.
- All Service members without record of a SCT screening are referred to a lab for screening unless the Service member can provide documentation of a prior screening. The date and results of the SCT screening will be annotated in the Medical Protection System (MEDPROS) and recorded in the Service member's electronic medical record.
- Unit or MTF health care providers train all unit medical personnel to recognize the signs of ECAST, conduct an initial evaluation, provide treatment, and determine whether to call for urgent medical evacuation or immediately transport the individual to the nearest MTF.

- A discrete method of identifying SCT-positive Service members (similar to those methods used to identify Service members who have sustained cold and or heat related injuries) is developed and added to the unit tactical standard operating procedure (TACSOP).
- Unit or MTF health care providers will train unit medical personnel and leaders on actions to take during an ECAST event.

This page intentionally left blank.

Glossary

The glossary lists acronyms with Army definitions. This publication is not the proponent for any terms.

SECTION I – ACRONYMS AND ABBREVIATIONS

ALARACT	all Army activities
AR	Army regulation
ATP	Army techniques publication
ADSM	Active Duty Service Member
DA	Department of the Army
DEET	N, N-diethyl-meta-toluamide
DHA	Defense Health Agency
DHA-PI	Defense Health Agency procedural instruction
DODI	Department of Defense instruction
ECAST	Exercise Collapse Associated with Sickle Cell Trait
FM	field manual
G6PD	glucose-6-phosphate dehydrogenase
MTF	medical treatment facility
MEDPROS	Medical Protection System
SCD	sickle cell disease
SCT	sickle cell trait
STAPH	*Staphylococcus aureus*
TACSOP	tactical standard operating procedure

This page intentionally left blank.

References

ALL WEBSITES VERIFIED ON 3 MARCH 2022.

REQUIRED PUBLICATIONS

These documents must be available to the intended users of this publication.

DoD Dictionary of Military and Associated Terms. May 2022.

FM 1-02.2. *Military Symbols*. 18 May 2022.

RELATED PUBLICATIONS

These documents contain relevant supplemental information.

DEPARTMENT OF DEFENSE PUBLICATIONS

Most Department of Defense publications are available online (https://www.acq.osd.mil/eie/afpmb/index.html).

Armed Forces Pest Management Board Technical Guide No. 24. *Contingency Pesticide Usage Guide*. 5 August 2021.

Armed Forces Pest Management Board Technical Guide No. 36. *Personal Protective Measures against Insects and Other Arthropods of Military Significance*. November 2015.

Armed Forces Pest Management Board Technical Guide No. 41. *Rodent-Borne Diseases with Special Emphasis on Protection from Hantavirus.* 29 January 2021.

This publication is available online (https://www.denix.osd.mil/ddes/home/).

Defense Explosives Safety Regulation 6055.09 Edition 1. 13 January 2019.

Department of Defense instructions are available online (https://www.esd.whs.mil/dd/).

DODI 4150.07. *DOD Pest Management Program*. 26 December 2019.

DODI 4715.19. *Use of Open-Air Burn Pits in Contingency Operations.* 13 November 2018.

DODI 6055.05. *Occupational and Environmental Health* (*OEH*). 11 November 2008.

DODI 6490.03. *Deployment Health.* 19 June 2019.

ARMY PUBLICATIONS

Most Army doctrinal publications are available online (https://armypubs.army.mil).

AR 30-22. *Army Food Program*. 17 July 2019.

AR 40-5. *Army Public Health Program. 12 May 2020.*

AR 350-1. *Army Training and Leader Development*. 10 December 2017.

ATP 3-90.97. *Mountain Warfare and Cold Weather Operations*. 29 April 2016.

ATP 4-41. *Army Field Feeding and Class I Operations*. 31 December 2015.

DA Pamphlet 30-22. *Operating Procedures for the Army Food Program*. 17 July 2019.

DA Pamphlet 40-11. *Army Public Health Program*. 18 May 2020.

DA Pamphlet 40-501. *Army Hearing Program.* 8 January 2015.

FM 7-22. *Holistic Health and Fitness.* 1 October 2020.

TB MED 507. *Heat Stress Control and Heat Casualty Management*. 12 April 2022.

TB MED 508. *Prevention and Management of Cold-Weather Injuries*. 1 April 2005.

TB MED 593. *Guidelines for Field Waste Management*. 15 September 2006.

TM 9-2330-267-13&P. *Operator and Field Maintenance Manual Including Repair Parts and Special Tools Lists (RPSTL) for Trailer, Tank, Water: 400 Gallon, 1-1/2 Ton, 2 Wheel, NSN 2330-01-108-7367 (EIC CEA), M149A2 (This Item is Included on EM 0049). 7 December 2015.*

TM 10-7200-200-13. *Operator, Organizational and Direct Support Maintenance Manual (Including Repair Parts and Special Tools List) for Can, Gasoline, Military, Steel; 5-Gallon; (FSN 7240-222-2088); Can, Water, Military; Steel, 5-Gallon; (7240-242-6153); Can, Water, Aluminum; 5-Gallon; (7240-242-3767); Can, Water, Military; Plastic; 5-Gallon (7240-089-3827); Case, Military, Water Can; (7240-125-9061) (This Item is Included on EM 0087)*. 15 February 1974.

MULTI-SERVICE PUBLICATIONS

Multi-Service publications are available online (https://armypubs.army.mil/).

ATP 3-11.32/MCWP 10-10E.8/NTTP 3-11.37/AFTTP 3-2.46. *Multi-Service Tactics, Techniques, and Procedures for Chemical. Biological, Radiological, and Nuclear, Passive Defense.* 13 May 2016.

ATP 4-02.7/MCRP 4-11.1F/NTTP 4-02.7/AFTTP 3-42.3. *Multi-Service Tactics, Techniques, and Procedures for Health Service Support in a Chemical, Biological, Radiological, and Nuclear Environment.* 15 March 2016.

ATP 4-02.85/MCRP 3-40A.1/NTRP 4-02.22/AFTTP(I) 3-2.69. *Multi-Service Tactics, Techniques, and Procedures for Treatment of Chemical Warfare Agent Casualties and Conventional Military Chemical Injuries.* 2 August 2016.

FM 6-27/MCTP 11-10C. *The Commander's Handbook on the Law of Land Warfare.* 7 August 2019.

TB MED 530/NAVMED P-5010-1/AFMAN 48-147_IP. *Tri-Service Food Code.* 1 March 2019.

TB MED 577/NAVMED P-5010-10/AFMAN 48-138_IP. *Sanitary Control and Surveillance of Field Water Supplies.* 1 May 2010.

OTHER PUBLICATIONS

North Atlantic Treaty Organization Standardization Agreements

These publications are available online (https://nso.nato.int/nso/home/main/home).

STANAG 2048. *Deployment Pest and Vector Surveillance and Control - Allied Medical Publication - 4.2.* Edition A. 18 March 2014.

STANAG 2122. *Requirement for Training in Casualty Care and Basic Hygiene for all Military Personnel - Allied Medical Publication - 8.15*. Edition A. 10 July 2017.

STANAG 2136. *Requirements for Water Potability During Field Operations and in Emergency Situations - Allied Medical Publication - 4.9.* Edition A. 21 March 2014.

STANAG 2561. *Allied Joint Medical Force Health Protection Doctrine - Allied Joint Medical Publication - 4*. Edition A. 27 July 2018.

STANAG 2885. *Emergency Supply of Water in Operations.* Edition 5. 13 January 2010.

Other Government Agencies

This publication is available online (https://apps.dtic.mil/dtic/sti/pdfs/ADA506350.pdf).

United States Air Force Guide to Operational Surveillance of Medically Important Vectors and Pests "Operational Entomology." Version 2.1. 15 August 2006.

This publication is available online (http://www.cdc.gov/niosh/docs/80-106).

National Institute for Occupational Safety and Health (NIOSH) Publication 80-106. *Criteria for a Recommended Standard: Working in Confined Spaces*. December 1979.

WEBSITES

Department of Defense Armed Forces Pest Management Board. https://www.acq.osd.mil/eie/afpmb

PRESCRIBED FORMS

This section contains no entries.

REFERENCED FORMS

Unless otherwise indicated, DA forms are available on the Army Publishing Directorate website (https://armypubs.army.mil/).

DA Form 2028. *Recommended Changes to Publications and Blank Forms.*

DA Form 5457. *Potable Water Container Inspection.*

This page intentionally left blank.

Index

Entries are by paragraph number unless indicated otherwise.

A

amebiasis, 3-41, 3-45
approved water purification procedures, 3-81—90

B

bacterial infections, 3-27, 6-90—91

C

campylobacteriosis, 3-28
carbon monoxide poisoning, 2-54, 2-93, 8-59, 9-21
chilblains, 8-24, 8-34
cholera, 3-31—32
cold and dry injury, 8-42
cold
  and wet injuries, 8-24
  injury, 2-31, 2-46, Chapter 8
    factors, 8-6
    prevention tools, 8-67—76
cryptosporidiosis, 3-42, Table 6-1

D

dehydration, 3-11, 7-9, Table 7-3, 8-55—56
disinfection, 3-11—12, 3-21, 3-24, 3-44, 3-53—54, 3-59, 3-61—62, Table 3-2, 3-99

E

earplugs, 10-23, 10-25, Figures 10-1—5, 10-27, 10-29—31, 10-35—37
earmuffs, 10-21—22, 10-25, 10-32, Figure 10-6, 10-34—37
escherichia coli, 3-33, 4-3, 4-6
Exercise Collapse Associated with Sickle Cell Trait, 11-3—11-8

F

foodborne pathogens, 4-3—13
frostbite, 2-49, 2-51, 2-92, 8-1, 8-8, 8-13—14, 8-42—45, 8-47, 8-49, 8-51, 8-53, 8-68, Table 8-2, 8-76, Table 8-3

G

giardiasis, 3-44, Table 6-1

H

handwashing and sanitizing, 2-16, 4-34—35
health threats, Chapter 2, 5-11, 6-7, 6-43, 6-90, 6-92
hearing loss preventive medicine measures, 10-20
heat cramps, 7-8
  exhaustion, 2-87, 7-7—10
  injury, 2-45, 2-83, Chapter 7
    prevention tools, 7-29—48
  rash, 2-87, 7-7, 7-12, 7-22
  stroke, 2-87, 7-7, 7-10, 7-22
hyponatremia, 7-16
hypothermia, 2-91, 8-1, 8-24—33, 8-42, 8-53

I

immersion syndrome, 2-91, 8-24, 8-38—41, Table 8-3
immunizations and chemoprophylaxis, 2-42—44

L

latrines, 2-69—70, 3-16, 4-18, 5-41—43, 5-47—64
legionnaires' disease, 3-34
leptospirosis, 3-35, Table 6-1

N

nonpotable water, 2-19, 3-8, 3-22, Table 3-1
noise, 2-97, 10-1
  hazards, 2-58, 2-97, Chapter 10

O

oral hygiene, 2-6, 2-26—29

P

palatable water, 3-9
personal hygiene, 1-8, 2-6, 2-10, 2-12—15, 2-20, 2-66, 2-71—72, 2-81, 2-83, 3-3, 3-5, 4-1, 4-16, 4-32—33, 8-16
physical fitness, 2-30—31, 2-73—74, 2-81, 2-103, 7-19, Table 7-3
potable water, 2-8, 2-19, 2-32, 2-81, 3-5, 3-7, 3-18, 3-21—23, 3-53, Table 3-2, 3-92
prevention of waterborne disease, 3-4
preventive medicine measures, 1-5—6, 1-8, 2-3—10, 2-33, 2-35, 2-42—44, 2-66, 2-76, 2-78, 2-80, 2-84, 2-94, 2-96, 6-64, 6-70—81, 10-20
protozoan infections, 3-40

R

raw water sources, 3-13—17
rhabdomyolysis, 7-15

S

schistosome dermatitis, 3-47
schistosomiasis, 3-45—47, Table 6-1
shigellosis, 3-39
Sickle Cell Trait, 7-15, 11-1, 11-7, 11-8
skin cancer, 7-14
sleep deprivation, 2-59—64, 2-92
snow blindness, 8-63—66
sources of water, 3-13—23
sunburn, 6-83, 7-7, 7-13, 7-22

T

tactical standard operating procedure, 11-8
toxic industrial materials, 1-8, 2-2, 2-52—54, 2-95, 9-1—3, 9-8, 9-40—41
  classifications, 9-4—7
transporting meals, 4-20—25
travelers' diarrhea, 3-28, 3-30
typhoid, 3-38

U

urine disposal facilities, 5-65—73

V

viral infection, 3-48

W

water treatment and purification, 3-10
waterborne pathogens, 3-24—50

This page intentionally left blank.

ATP 4-25.12,C2

08 August 2025

By Order of the Secretary of the Army:

RANDY A. GEORGE
General, United States Army
Chief of Staff

Official:

MATTHEW L. SANNITO
Acting Administrative Assistant to the
Secretary of the Army
2521835

DISTRIBUTION:
Active Army, Army National Guard, and United States Army Reserve. Distributed in electronic media only(EMO).

This page intentionally left blank.